THE ARBORS

▪ LANDSCAPE CONSTRUCTION PLANS ▪

VICINITY MAP

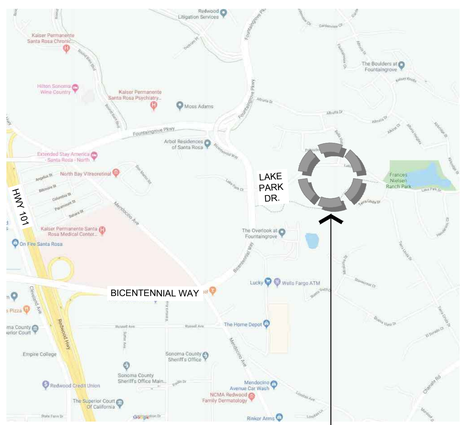

SITE MAP

SHEET INDEX

SHEET NUMBER	SHEET TITLE
L0.0	COVER SHEET
L0.1	OVERALL SITE PLAN
L1.0-L1.5	CALLOUT & LAYOUT PLANS
L2.0-L2.1	LANDSCAPE DETAILS
L3.0-L3.5	PLANTING PLANS
L3.6	PLANTING LEGEND
L4.0-L4.5	IRRIGATION PLANS
L4.6	IRRIGATION LEGEND
L4.7	IRRIGATION NOTES
L4.8-L4.10	IRRIGATION DETAILS
L4.11-L4.12	IRRIGATION WORKSHEETS
L5.0-L5.1	NOTES AND SPECIFICATIONS

STAFF APPRVL	REVISIONS NO.	REVISION	DATE	R.C.E.	EXP. DATE	CITY ENG.	DATE

PUBLIC IMPROVEMENTS APPROVED FOR CONSTRUCTION
CITY OF SANTA ROSA

BY: _____
DAVID M. GUHIN R.C.E. 65663
CITY ENGINEER
CITY OF SANTA ROSA

DATE: _____

CITY OF SANTA ROSA FILE NO. 2020-0022

CLIENT:
CHAMBERLAIN GROUP
655 SKYWAY, SUITE 230
SAN CARLOS
CALIFORNIA
94070
(650)-595-5582

CALL 811 BEFORE YOU DIG
SAFE DIGGING PARTNER

LICENSED LANDSCAPE ARCHITECT
ZEKI R. ABED
Lic. No. 3108
Date 2/22
STATE OF CALIFORNIA

VAN DORN ABED
LANDSCAPE ARCHITECTS, INC.
81 14TH ST. SAN FRANCISCO, CA
ZIP 94103 PH (415) 864-1921 FAX(415) 864-4796

COPYRIGHT © 2006 VAN DORN ABED LANDSCAPE ARCHITECTS, INC.
ALL DRAWINGS, WRITTEN MATERIAL, APPEARING HEREON CONSTITUTE ORIGINAL WORK OF VAN DORN ABED LANDSCAPE ARCHITECTS & SHALL NOT BE REPRODUCED, CHANGED OR COPIED IN ANY FORM OR MANNER WITHOUT THE CONSENT OF THE LANDSCAPE ARCHITECT.

PROJECT MANAGER: MW
DRAWN BY: HN
CHECKED BY: ZA

PROJECT NAME/LOCATION: THE ARBORS SANTA ROSA CA.
DRAWING TITLE: LANDSCAPE CONSTRUCTION DRAWINGS

REVISIONS: NO. | DESCRIPTION | BY: | DATE

SHEET TITLE: COVER SHEET
SCALE: N/A
ISSUE DATE: 08/14/20
PROJECT NO.: V0646
SHEET NO.: L0.0
28 OF 59

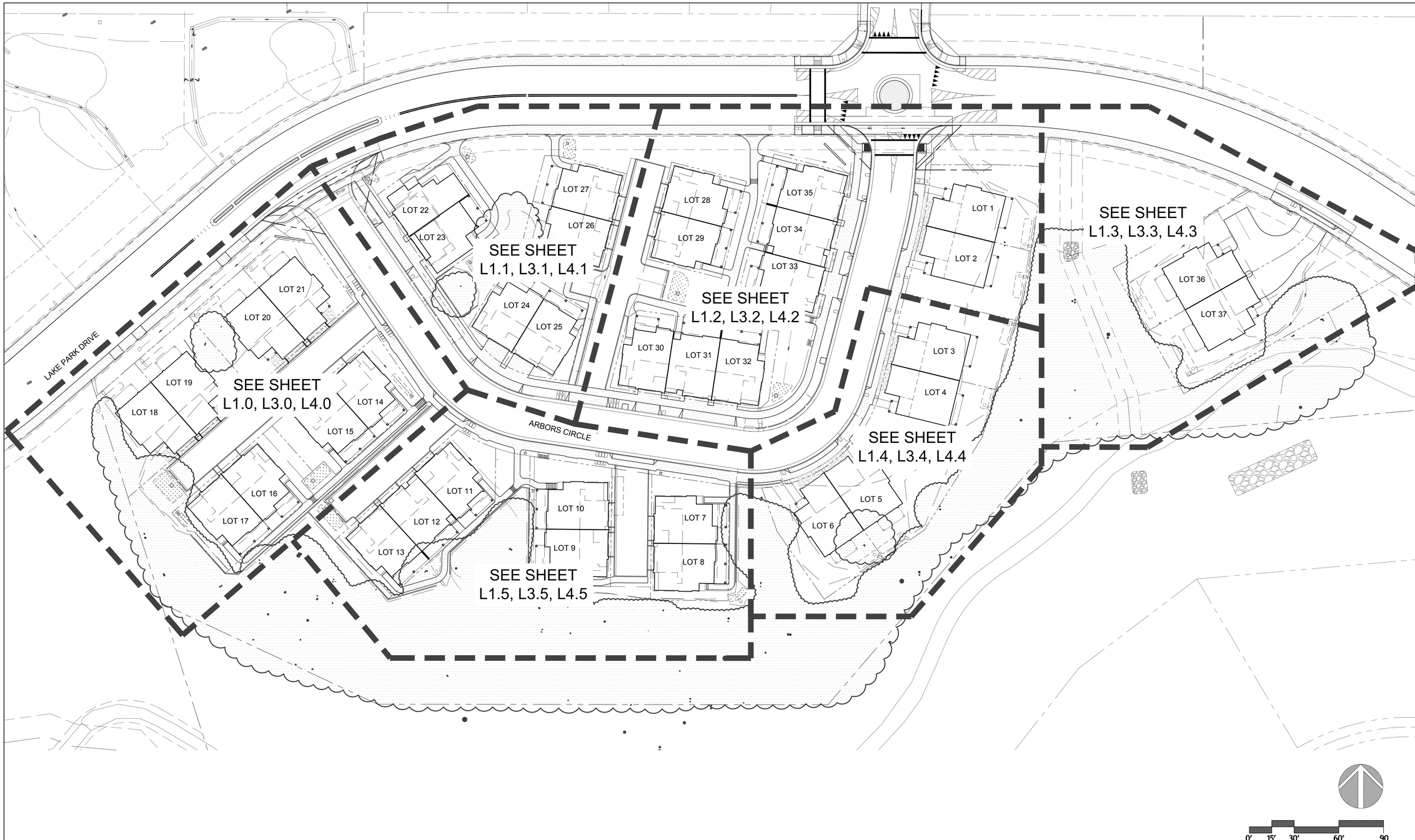

STAFF APPRVL		REVISIONS NO.	REVISION	DATE	R.C.E.	EXP. DATE	CITY ENG.	DATE

PUBLIC IMPROVEMENTS APPROVED FOR CONSTRUCTION

CITY OF SANTA ROSA

BY: _____

DAVID M. GUHIN
CITY ENGINEER
CITY OF SANTA ROSA

R.C.E. 65663

DATE: _____

CITY OF SANTA ROSA FILE NO. 2020-0022

CLIENT:

CHAMBERLAIN GROUP
655 SKYWAY, SUITE 230
SAN CARLOS
CALIFORNIA
94070
(650)-595-5582

CALL 811 BEFORE YOU DIG
811
SAFE DIGGING PARTNER

LICENSED LANDSCAPE ARCHITECT
ZEKI R. ABED
STATE OF CALIFORNIA

VAN DORN ABED
LANDSCAPE ARCHITECTS, INC.
81 14TH ST. SAN FRANCISCO, CA
ZIP 94103 PH (415) 864-1921 FAX(415) 864-4796

COPYRIGHT © 2006 VAN DORN ABED LANDSCAPE ARCHITECTS, INC.
ALL DRAWINGS ARE INSTRUMENTS OF SERVICE, WHEREVER PREPARED, AND ARE THE PROPERTY OF VAN DORN ABED LANDSCAPE ARCHITECTS & SHALL NOT BE REPRODUCED, PUBLISHED OR USED FOR ANY PURPOSE WITHOUT THE CONSENT OF THE LANDSCAPE ARCHITECT.

PROJECT MANAGER: MW
DRAWN BY: HN
CHECKED BY: ZA

PROJECT NAME/LOCATION:
THE ARBORS
SANTA ROSA CA.

DRAWING TITLE:
LANDSCAPE CONSTRUCTION DRAWINGS

REVISIONS: NO.	DESCRIPTION	BY:	DATE

SHEET TITLE:
OVERALL SITE PLAN

SCALE: 1"=30'-0"
ISSUE DATE: 08/14/20
PROJECT NO.: V0646
SHEET NO.: L0.1

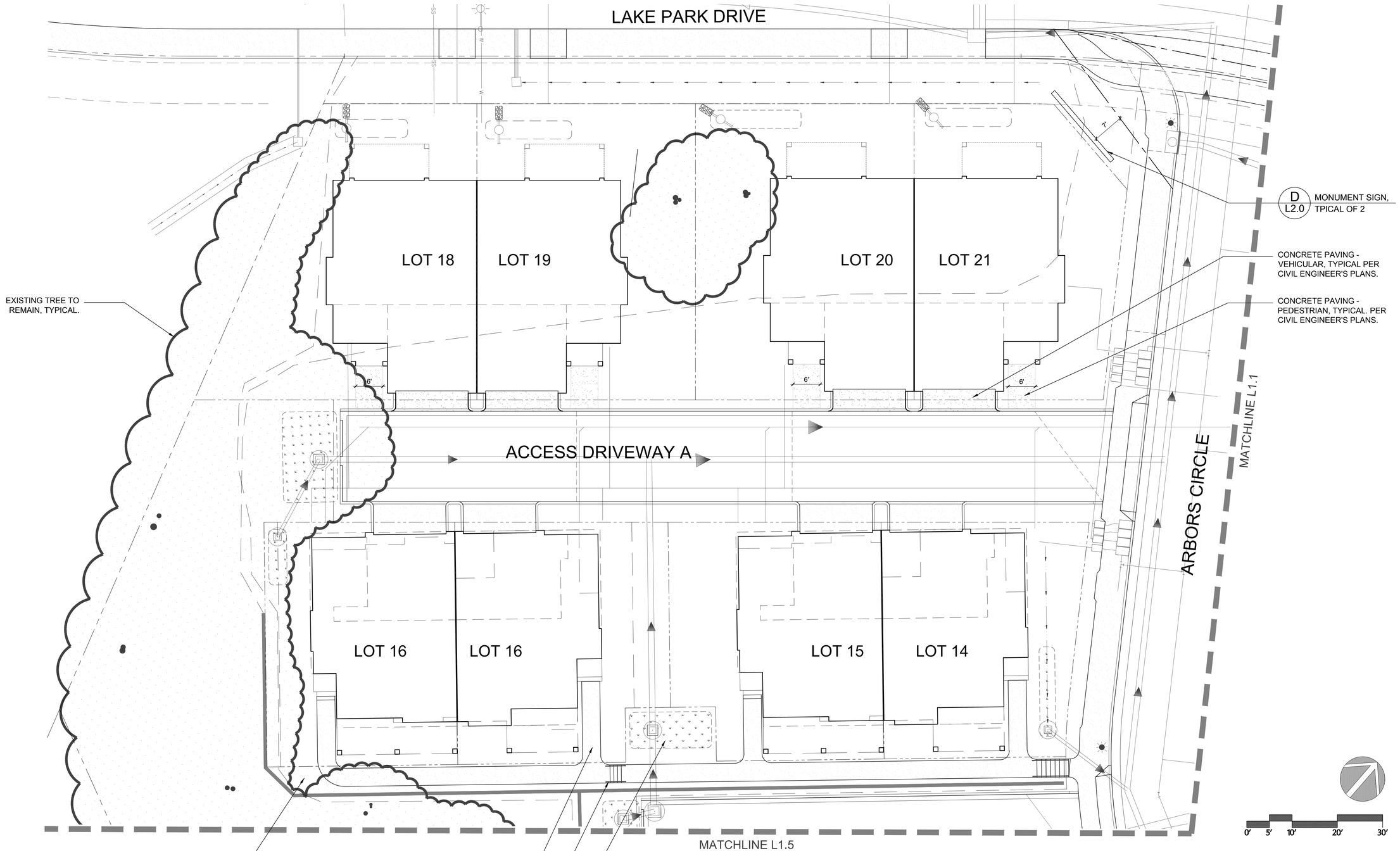

STAFF APPRVL	REVISIONS NO.	REVISION	DATE	R.C.E.	EXP. DATE	CITY ENG.	DATE

PUBLIC IMPROVEMENTS APPROVED FOR CONSTRUCTION
CITY OF SANTA ROSA

BY: _____
DAVID M. GUHIN R.C.E. 65663
CITY ENGINEER
CITY OF SANTA ROSA

DATE: _____

CITY OF SANTA ROSA FILE NO. 2020-0022

CLIENT:
CHAMBERLAIN GROUP
655 SKYWAY, SUITE 230
SAN CARLOS
CALIFORNIA
94070
(650)-595-5582

CALL 811 BEFORE YOU DIG
811
SAFE DIGGING PARTNER

LICENSED LANDSCAPE ARCHITECT
JACK R. ABED
STATE OF CALIFORNIA

VAN DORN ABED
LANDSCAPE ARCHITECTS, INC.
81 14TH ST. SAN FRANCISCO, CA
ZIP 94103 PH (415) 864-1921 FAX(415) 864-4796

COPYRIGHT © 2006 VAN DORN ABED LANDSCAPE ARCHITECTS, INC.
ALL DRAWINGS ARE INTRUMENTS OF SERVICE AND ARE THE PROPERTY OF VAN DORN ABED LANDSCAPE ARCHITECTS & SHALL NOT BE REPRODUCED, USED OR DISCLOSED WITHOUT WRITTEN CONSENT OF THE LANDSCAPE ARCHITECT.

PROJECT MANAGER: MW
DRAWN BY: HN
CHECKED BY: ZA

PROJECT NAME/LOCATION:
THE ARBORS
SANTA ROSA CA.

DRAWING TITLE:
LANDSCAPE CONSTRUCTION DRAWINGS

REVISIONS:

NO.	DESCRIPTION	BY:	DATE

SHEET TITLE:
CALLOUT & LAYOUT PLAN

SCALE: 1"=10'-0"
ISSUE DATE: 08/14/20
PROJECT NO.: V0646
SHEET NO.: L1.0
30 OF 59

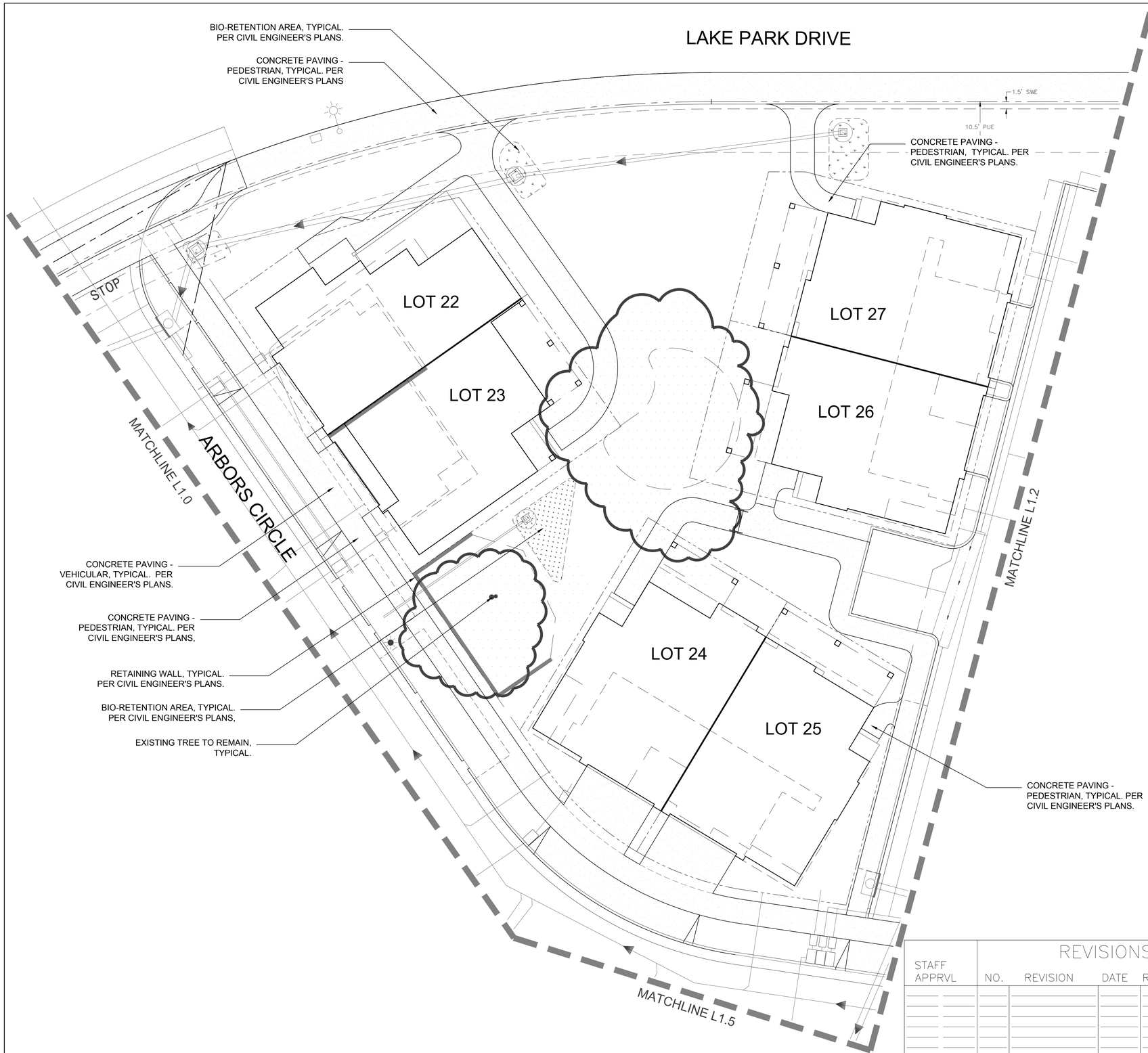

STAFF APPRVL	REVISIONS NO.	REVISION	DATE	R.C.E.	EXP. DATE	CITY ENG.	DATE

PUBLIC IMPROVEMENTS APPROVED FOR CONSTRUCTION

CITY OF SANTA ROSA

BY: _____

DAVID M. GUHIN R.C.E. 65663
CITY ENGINEER
CITY OF SANTA ROSA

DATE: _____

CITY OF SANTA ROSA FILE NO. 2020-0022

CLIENT:
CHAMBERLAIN GROUP
655 SKYWAY, SUITE 230
SAN CARLOS
CALIFORNIA
94070
(650)-595-5582

CALL 811 BEFORE YOU DIG
811
SAFE DIGGING PARTNER

LICENSED LANDSCAPE ARCHITECT
ZEKI R. ABED
Lic. No. 3108
Exp. 1/22
STATE OF CALIFORNIA

VAN DORN ABED
LANDSCAPE ARCHITECTS, INC.
81 14TH ST. SAN FRANCISCO, CA
ZIP 94103 PH (415) 864-1921 FAX(415) 864-4796

COPYRIGHT © 2006 VAN DORN ABED LANDSCAPE ARCHITECTS, INC.
ALL DRAWINGS, SPECIFICATIONS, WRITTEN MATERIAL, IMPRINTS, DESIGNS, PLANS, IDEAS, DETAILS, ARRANGEMENTS & SAME MAY NOT BE DUPLICATED, USED OR DISCLOSED WITHOUT WRITTEN CONSENT OF THE LANDSCAPE ARCHITECT.

PROJECT MANAGER: MW
DRAWN BY: HN
CHECKED BY: ZA

PROJECT NAME/LOCATION:
THE ARBORS
SANTA ROSA CA.

DRAWING TITLE:
LANDSCAPE CONSTRUCTION DRAWINGS

REVISIONS: NO.	DESCRIPTION:	BY:	DATE

SHEET TITLE:
CALLOUT & LAYOUT PLAN

SCALE: 1"=10'-0"
ISSUE DATE: 08/14/20
PROJECT NO.: V0646
SHEET NO.: L1.1

CONCRETE PAVING - PEDESTRIAN, TYPICAL. PER CIVIL ENGINEER'S PLANS

MONUMENT SIGN, TYPICAL OF 2 (D / L2.0)

HANDRAIL AT STEPS, TYP. (B / L2.0)

9'-6"

4'

5'

LOT 28

LOT 29

LOT 30

LOT 31

LOT 32

LOT 33

LOT 34

LOT 35

LOT 1

LOT 2

ARBORS CIRCLE

ACCESS DRIVEWAY B

MATCHLINE L1.1

MATCHLINE L1.3

MATCHLINE L1.4

MATCHLINE L1.5

3'

8'

4'

3'-9"

CONCRETE PAVING - PEDESTRIAN, TYPICAL. PER CIVIL ENGINEER'S PLANS.

(B / L2.0) HANDRAIL AT STEPS, TYP.

(C / L2.0) MAILBOX KIOSK -LOCATION #2

(A / L2.0) CONCRETE PAVING, TYP.

0' 5' 10' 20' 30'

STAFF APPRVL	REVISIONS NO.	REVISION	DATE	R.C.E.	EXP. DATE	CITY ENG.	DATE

PUBLIC IMPROVEMENTS APPROVED FOR CONSTRUCTION

CITY OF SANTA ROSA

BY: _____

DAVID M. GUHIN R.C.E. 65663
CITY ENGINEER
CITY OF SANTA ROSA

DATE: _____

CITY OF SANTA ROSA FILE NO. 2020-0022

CLIENT:

CHAMBERLAIN GROUP
655 SKYWAY, SUITE 230
SAN CARLOS
CALIFORNIA
94070
(650)-595-5582

CALL 811 BEFORE YOU DIG
811
SAFE DIGGING PARTNER

LICENSED LANDSCAPE ARCHITECT
ZEKI R. ABED
Lic. No. 3108
Exp. 1/22
STATE OF CALIFORNIA

VAN DORN ABED
LANDSCAPE ARCHITECTS, INC.
81 14TH ST. SAN FRANCISCO, CA
ZIP 94103 PH (415) 864-1921 FAX(415) 864-4796

COPYRIGHT © 2006 VAN DORN ABED LANDSCAPE ARCHITECTS, INC.

ALL DRAWINGS ARE INSTRUMENTS OF SERVICE AND ARE THE PROPERTY OF VAN DORN ABED LANDSCAPE ARCHITECTS & SHALL NOT BE REPRODUCED, CHANGED OR COPIED IN ANY FORM OR MANNER WITHOUT THE CONSENT OF THE LANDSCAPE ARCHITECT.

PROJECT MANAGER: MW
DRAWN BY: HN
CHECKED BY: ZA

PROJECT NAME/LOCATION:
THE ARBORS
SANTA ROSA CA.

DRAWING TITLE:
LANDSCAPE CONSTRUCTION DRAWINGS

REVISIONS: NO.	DESCRIPTION	BY:	DATE

SHEET TITLE:
CALLOUT & LAYOUT PLAN

SCALE: 1"=10'-0"
ISSUE DATE: 08/14/20
PROJECT NO.: V0646
SHEET NO.: L1.2

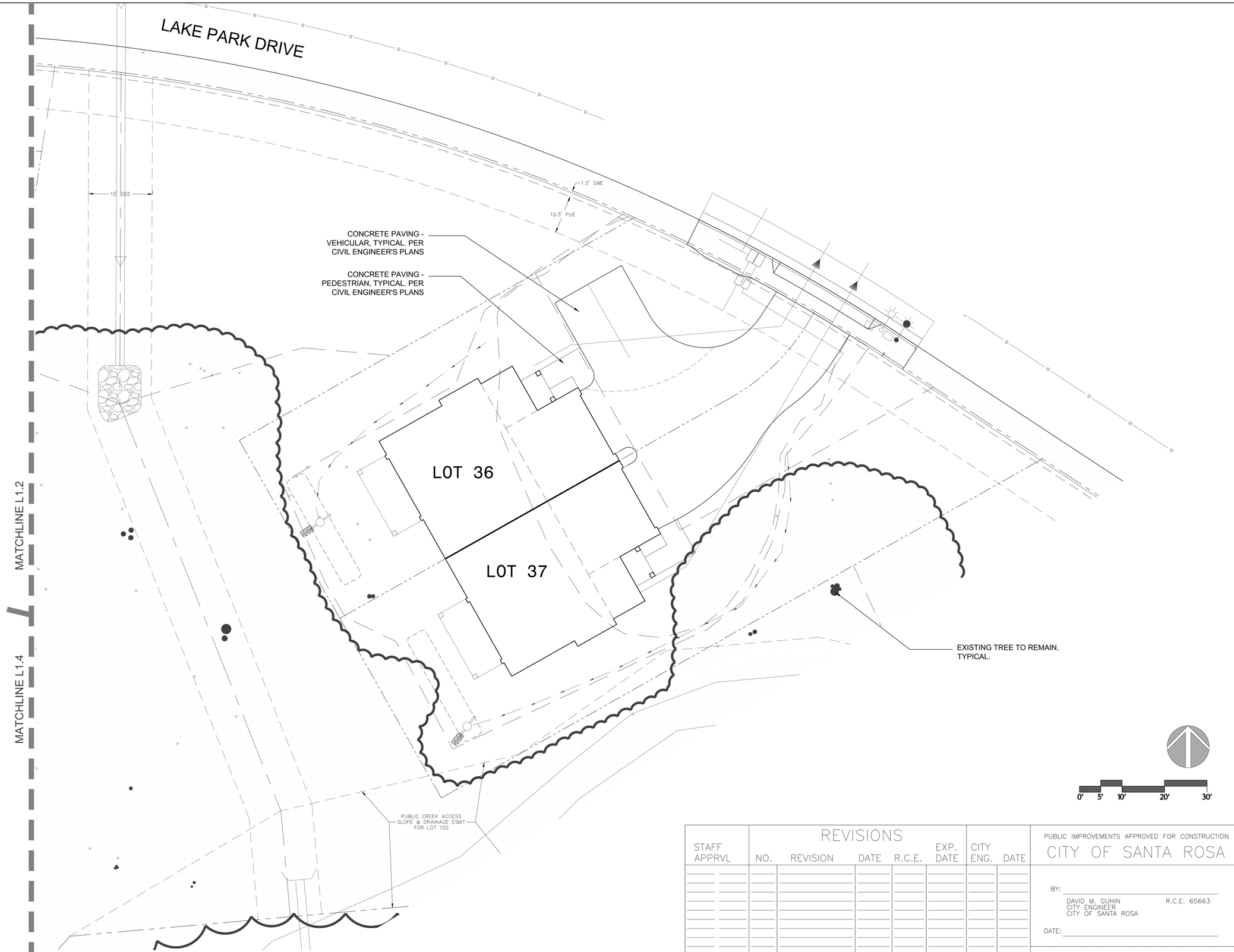

STAFF APPRVL		REVISIONS NO.	REVISION	DATE	R.C.E.	EXP. DATE	CITY ENG.	DATE

PUBLIC IMPROVEMENTS APPROVED FOR CONSTRUCTION
CITY OF SANTA ROSA

BY: _____
DAVID M. GUHIN R.C.E. 65663
CITY ENGINEER
CITY OF SANTA ROSA

DATE: _____

CITY OF SANTA ROSA FILE NO. 2020-0022

CLIENT:
CHAMBERLAIN GROUP
655 SKYWAY, SUITE 230
SAN CARLOS
CALIFORNIA
94070
(650)-595-5582

CALL 811 BEFORE YOU DIG
SAFE DIGGING PARTNER

LICENSED LANDSCAPE ARCHITECT
JACK R. ABED
Lic. No. 3108
Exp. 2/22
STATE OF CALIFORNIA

VAN DORN ABED
LANDSCAPE ARCHITECTS, INC.
81 14TH ST. SAN FRANCISCO, CA
ZIP 94103 PH (415) 864-1921 FAX(415) 864-4796

COPYRIGHT © 2006 VAN DORN ABED LANDSCAPE ARCHITECTS, INC.
ALL DRAWINGS, WRITTEN MATERIAL, APPEARING HEREIN CONSTITUTE ORIGINAL, UNPUBLISHED WORK OF THE VAN DORN ABED LANDSCAPE ARCHITECTS & SHALL NOT BE DUPLICATED, USED OR DISCLOSED WITHOUT WRITTEN CONSENT OF THE LANDSCAPE ARCHITECT.

PROJECT MANAGER: MW
DRAWN BY: HN
CHECKED BY: ZA

PROJECT NAME/LOCATION:
THE ARBORS
SANTA ROSA, CA.
DRAWING TITLE:
LANDSCAPE CONSTRUCTION DRAWINGS

REVISIONS: NO.	DESCRIPTION	BY:	DATE

SHEET TITLE:
CALLOUT & LAYOUT PLAN

SCALE: 1"=10'-0"
ISSUE DATE: 08/14/20
PROJECT NO.: V0646
SHEET NO.: L1.3

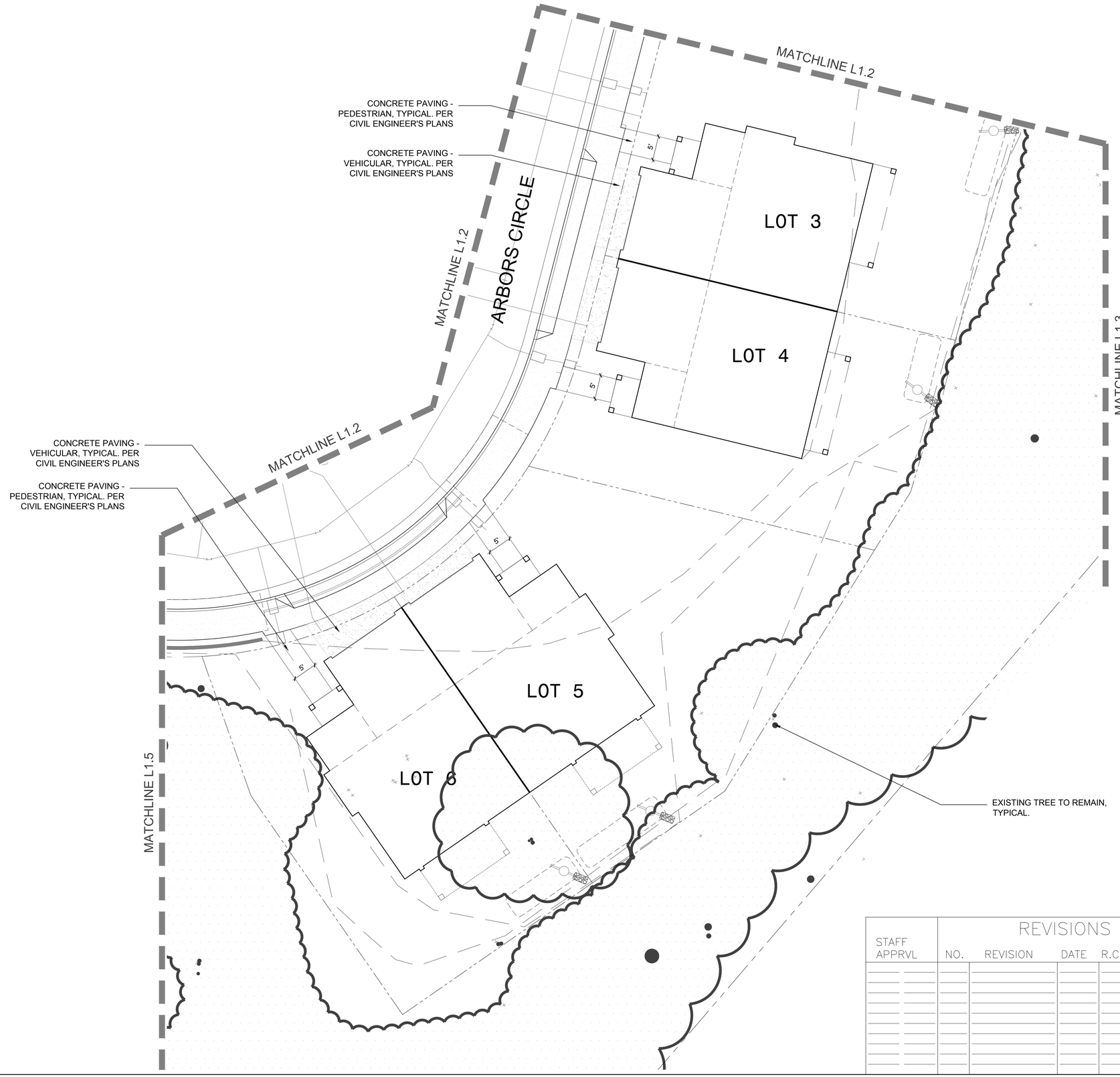

STAFF APPRVL	NO.	REVISION	DATE	R.C.E.	EXP. DATE	CITY ENG.	DATE

REVISIONS

PUBLIC IMPROVEMENTS APPROVED FOR CONSTRUCTION

CITY OF SANTA ROSA

BY: _____

DAVID M. GUHIN R.C.E. 65663
CITY ENGINEER
CITY OF SANTA ROSA

DATE: _____

CITY OF SANTA ROSA FILE NO. 2020-0022

CLIENT:

CHAMBERLAIN GROUP
655 SKYWAY, SUITE 230
SAN CARLOS
CALIFORNIA
94070
(650)-595-5582

CALL 811 BEFORE YOU DIG
811
SAFE DIGGING PARTNER

LICENSED LANDSCAPE ARCHITECT
ZEKI R. ABED
Lic. No. 3108
Exp. 1/22
STATE OF CALIFORNIA

VAN DORN ABED
LANDSCAPE ARCHITECTS, INC.
81 14TH ST. SAN FRANCISCO, CA
ZIP 94103 PH (415) 864-1921 FAX(415) 864-4796

COPYRIGHT © 2006 VAN DORN ABED LANDSCAPE ARCHITECTS, INC.
ALL DRAWINGS ARE THE INTELLECTUAL PROPERTY OF VAN DORN ABED LANDSCAPE ARCHITECTS & SHALL NOT BE DUPLICATED, DISTRIBUTED OR REPRODUCED WITHOUT THE CONSENT OF THE LANDSCAPE ARCHITECT.

PROJECT MANAGER: MW
DRAWN BY: HN
CHECKED BY: ZA

PROJECT NAME/LOCATION:
THE ARBORS
SANTA ROSA CA.

DRAWING TITLE:
LANDSCAPE CONSTRUCTION DRAWINGS

REVISIONS: NO.	DESCRIPTION	BY:	DATE

SHEET TITLE:
CALLOUT & LAYOUT PLAN

SCALE: 1"=10'-0"
ISSUE DATE: 08/14/20
PROJECT NO.: V0646
SHEET NO.: L1.4
34 OF 59

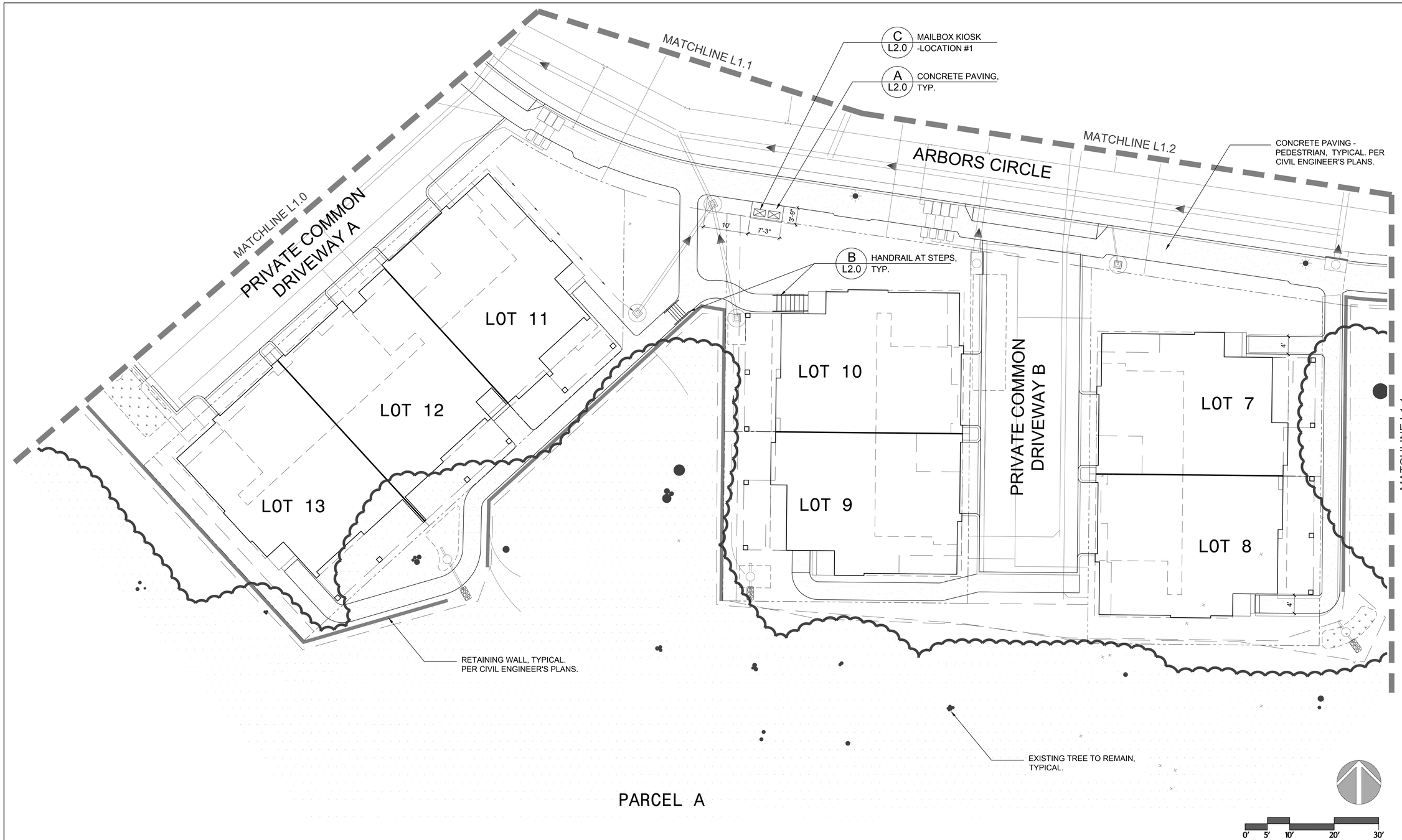

STAFF APPRVL	REVISIONS NO.	REVISION	DATE	R.C.E.	EXP. DATE	CITY ENG.	DATE

PUBLIC IMPROVEMENTS APPROVED FOR CONSTRUCTION
CITY OF SANTA ROSA

BY: _____
DAVID M. GUHIN R.C.E. 65663
CITY ENGINEER
CITY OF SANTA ROSA

DATE: _____

CITY OF SANTA ROSA FILE NO. 2020-0022

CLIENT:
CHAMBERLAIN GROUP
655 SKYWAY, SUITE 230
SAN CARLOS
CALIFORNIA
94070
(650)-595-5582

CALL 811 BEFORE YOU DIG
811
SAFE DIGGING PARTNER

LICENSED LANDSCAPE ARCHITECT
ZEKI R. ABED
Lic. No. 3908
Exp. 1/22
STATE OF CALIFORNIA

VAN DORN ABED
LANDSCAPE ARCHITECTS, INC.
81 14TH ST. SAN FRANCISCO, CA
ZIP 94103 PH (415) 864-1921 FAX(415) 864-4796

COPYRIGHT © 2006 VAN DORN ABED LANDSCAPE ARCHITECTS, INC.
ALL DRAWINGS ARE THE INTELLECTUAL PROPERTY OF VAN DORN ABED LANDSCAPE ARCHITECTS & SHALL NOT BE REPRODUCED, DISTRIBUTED OR TRANSMITTED WITHOUT THE CONSENT OF THE LANDSCAPE ARCHITECT.

PROJECT MANAGER: MW
DRAWN BY: HN
CHECKED BY: ZA

PROJECT NAME/LOCATION:
THE ARBORS
SANTA ROSA, CA.
DRAWING TITLE:
LANDSCAPE CONSTRUCTION DRAWINGS

REVISIONS:

NO.	DESCRIPTION	BY:	DATE

SHEET TITLE:
CALLOUT & LAYOUT PLAN

SCALE: 1"=10'-0"
ISSUE DATE: 08/14/20
PROJECT NO.: V0646
SHEET NO.: L1.5
35 OF 59

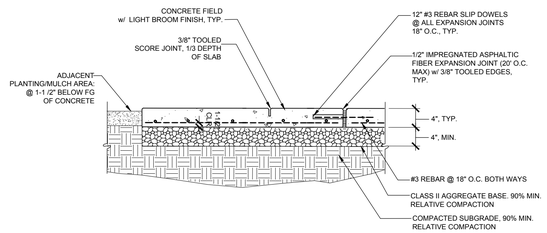

CONCRETE NOTES:

1. CONCRETE PAVING TO MEET ALL ACI INTERNATIONAL GUIDELINES.
2. ALL FORMWORK,SCORING,PROPOSED JOINT SPACING TO BE APPROVED AND REVIEWED BY OWNER/OWNER'S REPRESENTATIVE PRIOR TO POURING.
3. ALL SCORE JOINTS TO BE MINIMUM 1/3 DEPTH OF SLAB. SEE PLAN FOR SCORING LAYOUT.
4. DISTANCE BETWEEN SCPRE JTS TO BE MAXIMUM 24 TIMES SLAB THICKNESS & NO MORE THAN 100 SF APART. ALL JTS TO BE CONTINUOUS.
5. CONCRETE SCORING SHALL BE AS SQUARE AS PRACTICAL. NEVER MAKE LONG SIDE MORE THAN 1-1/2 TIMES LENGTH OF SHORT SIDE.
6. INSTALL EXPANSION JOINTS WHERE NEW PAVING MEETS EXISTING PAVING, WALLS, CURBS, FOUNDATIONS, OR OTHER FIXED OBJECTS, AND CHANGES IN WALK DIRECTIONS.
7. CONCRETE COLOR TO BE NATURAL GRAY.
8. PAVING FIELD TO BE LIGHT BROOM FINISH, PERPENDICULAR TO PATH OF TRAVEL.
9. PAVING PROFILE , AGGREGATE, SUBBASE DEPTH, PREPARATION & COMPACTION SHALL BE PER GEOTECH ENGINEER. PROFILES SHOWN ARE FOR BIDDING PURPOSES ONLY. SEE GEOTECH REPORT FOR PAVING & SUBBASE REQUIREMENTS.

A CONCRETE PAVING
3/4"=1'-0"

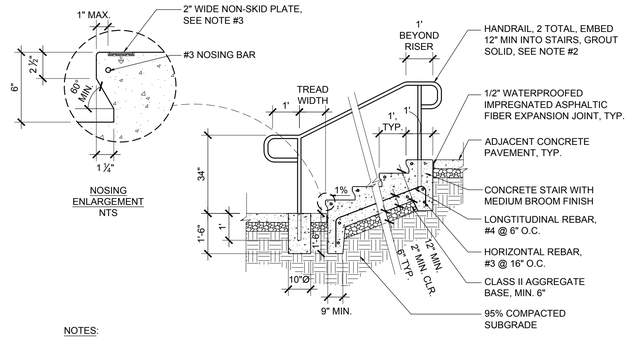

NOTES:

1. CONCRETE STAIRS TO BE UNCOLORED CONCRETE WITH MEDIUM BROOM FINISH.
2. HANDRAILS TO BE 1-1/2" O.D. WELDED STEEL PIPE, PRIME AND PAINT WITH ZINC-RICH PRIMER AND 2 COATS ENAMEL, COLOR TO BE DARK BRONZE. SUBMIT SHOP DRAWINGS TO OWNER FOR REVIEW AND APPROVAL.
3. ANTI-SLIP PLATE SHALL BE A STRIP OF CLEARLY CONTRASTING COLOR AT LEAST 2 INCHES WIDE AND MAXIMUM 4" AND PLACED PARALLEL TO AND NOT MORE THAN 1 INCH FROM THE NOSE OF THE STEP OR LANDING TO ALERT THE VISUALLY IMPAIRED. STRIP TO COMPLY WITH CBC 1115A.5 AND 11B-504.4. ANTI-SLIP PLATE SHALL BE MODEL T-24 MANUFACTURED BY AMERICAN SAFETY TREAD CO., OR APPROVED EQUAL. COLOR TO BE BLACK.
4. RISERS SHALL BE EQUAL IN HEIGHT.

B HANDRAIL
3/8"=1'-0"

NOTES:

1. ALL CBU'S TO BE SALSBURY REGENCY DECORATIVE CBU. ACCESSIBLE AND USPS APPROVED.

   QTY: 3 - TYPE IV SALSBURY REGENCY DECORATIVE CBU, MODEL #3313R-BRZ-U.
2. TOTAL NUMBER OF DWELLING UNITS IN DEVELOPMENT: 37
   TOTAL NUMBER OF MAILBOXES PROVIDED: 39 & 3 PARCEL BOXES.
3. USPS APPROVED CBU AVAILABLE THROUGH MAILBOXES.COM, (800) 624-5269. COLOR TO BE BRONZE.
4. CONTRACTOR TO INSTALL CBU PER MANUFACTURER'S INSTRUCTIONS.

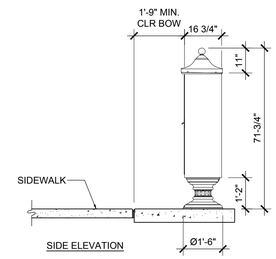

SIDE ELEVATION

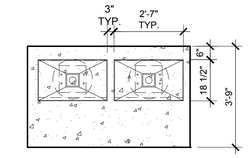

PLAN VIEW
LOCATION #1

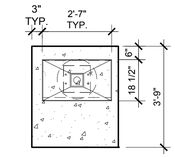

PLAN VIEW
LOCATION #2

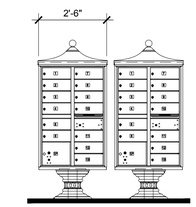

FRONT ELEVATION

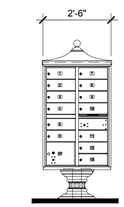

FRONT ELEVATION

C MAILBOX KIOSK
3/8"=1'-0"

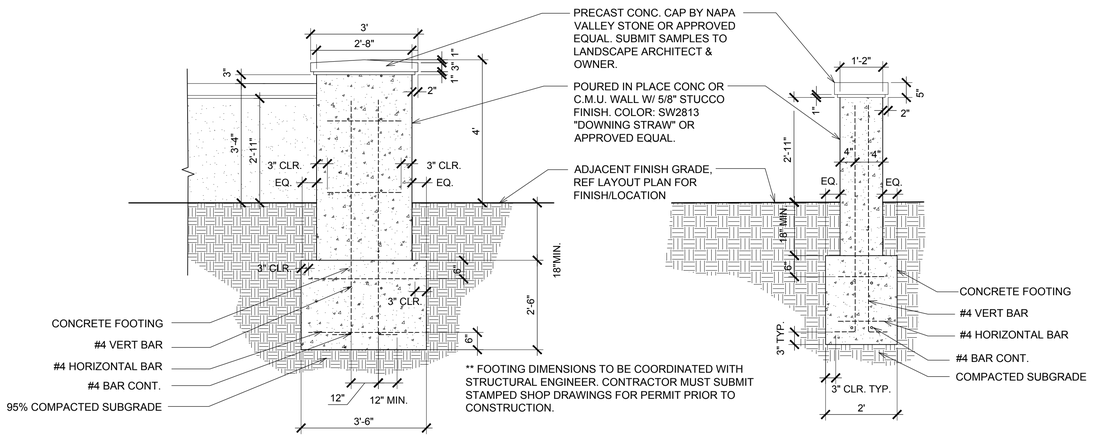

SECTION

SECTION

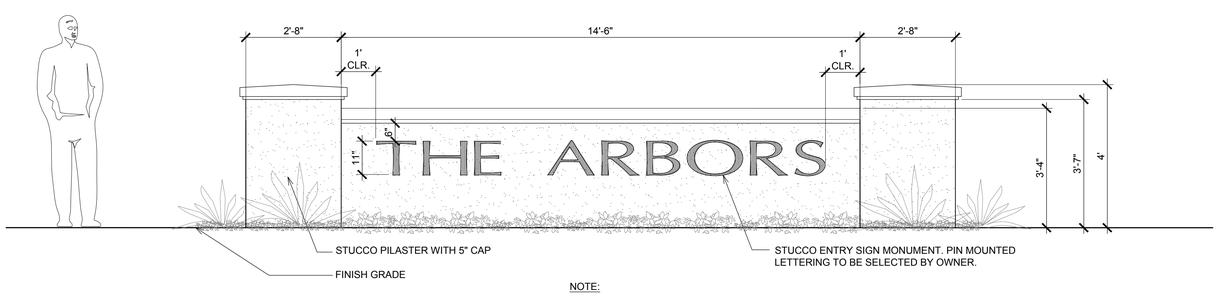

ELEVATION

NOTE:

1. FINAL LETTERING TO BE SELECTED BY OWNER. CONTRACTOR TO COORDINATE WITH OWNER AND SUBMIT SHOP DRAWINGS OF LETTERING TO OWNER FOR APPROVAL.
2. CONTRACTOR TO SUBMIT SAMPLES OF WALL CAP TO LANDSCAPE ARCHITECT AND OWNER FOR APPROVAL PRIOR TO ORDERING.

D MONUMENT SIGN
1/2"=1'-0"

STAFF APPRVL		REVISIONS NO.	REVISION	DATE	R.C.E.	EXP. DATE	CITY ENG.	DATE

PUBLIC IMPROVEMENTS APPROVED FOR CONSTRUCTION
CITY OF SANTA ROSA

BY: _____
DAVID M. GUHIN R.C.E. 65663
CITY ENGINEER
CITY OF SANTA ROSA

DATE: _____

CITY OF SANTA ROSA FILE NO. 2020-0022

CLIENT:
CHAMBERLAIN GROUP
655 SKYWAY, SUITE 230
SAN CARLOS
CALIFORNIA
94070
(650)-595-5582

CALL 811 BEFORE YOU DIG
811
SAFE DIGGING PARTNER

LICENSED LANDSCAPE ARCHITECT
JACK R. ABED
No. 2611
Exp. 2/22
STATE OF CALIFORNIA

VAN DORN ABED
LANDSCAPE ARCHITECTS, INC.
81 14TH ST. SAN FRANCISCO, CA
ZIP 94103 PH (415) 864-1921 FAX(415) 864-4796

COPYRIGHT © 2006 VAN DORN ABED LANDSCAPE ARCHITECTS, INC.
ALL DRAWINGS ARE INSTRUMENTS OF SERVICE AND ARE THE PROPERTY OF THE ARCHITECT & SHALL NOT BE REPRODUCED, USED OR DISCLOSED WITHOUT THE WRITTEN CONSENT OF THE LANDSCAPE ARCHITECT.

PROJECT MANAGER: MW
DRAWN BY: HN
CHECKED BY: ZA

PROJECT NAME/LOCATION: THE ARBORS
SANTA ROSA CA.
DRAWING TITLE: LANDSCAPE CONSTRUCTION DRAWINGS

REVISIONS: NO.	DESCRIPTION	BY:	DATE

SHEET TITLE: LANDSCAPE DETAILS

SCALE: AS NOTED
ISSUE DATE: 08/14/20
PROJECT NO.: V0646
SHEET NO.: L2.0
36 of 59

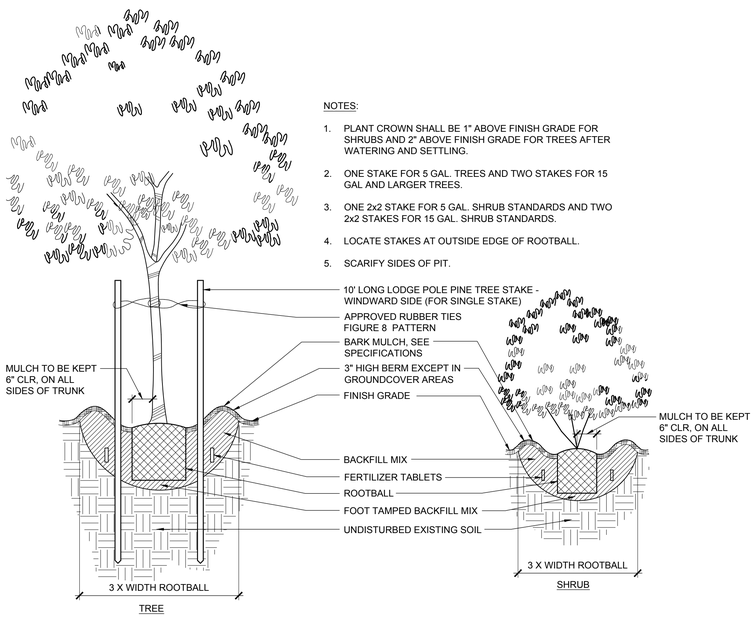

NOTES:

1. PLANT CROWN SHALL BE 1" ABOVE FINISH GRADE FOR SHRUBS AND 2" ABOVE FINISH GRADE FOR TREES AFTER WATERING AND SETTLING.
2. ONE STAKE FOR 5 GAL. TREES AND TWO STAKES FOR 15 GAL AND LARGER TREES.
3. ONE 2x2 STAKE FOR 5 GAL. SHRUB STANDARDS AND TWO 2x2 STAKES FOR 15 GAL. SHRUB STANDARDS.
4. LOCATE STAKES AT OUTSIDE EDGE OF ROOTBALL.
5. SCARIFY SIDES OF PIT.

A TREE & SHRUB PLANTING

3/4"=1'-0"

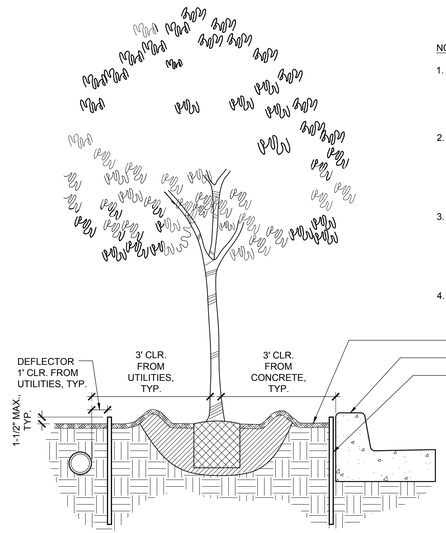

LINEAR ROOT DEFLECTION PANELS, 24" DEEP X 10' LONG CENTERED ON TREE (5' ON EACH SIDE OF TREE). MANUFACTURED BY ROOT SOLUTIONS. AVAILABLE FROM VESPRO, INC.
Phone: 800.554.0914
Local: 415.459.7311
Fax: 415.459.4038

NOTES:

1. ALL TREES CLOSER THAN 5'-0" FROM CURBS, FOUNDATIONS, SIDEWALKS, OR OTHER HARDSCAPE ITEMS SHALL BE INSTALLED WITH ROOT DEFLECTORS. SEE SPECIFICATIONS FOR ADDITIONAL REQUIREMENTS.
2. MANY TREES WILL REQUIRE ROOT DEFLECTORS. CONTRACTOR SHALL REVIEW THE PLANS/DETAILS CAREFULLY, AND INSTALL ALL REQUIRED ROOT DEFLECTORS. LANDSCAPE INSTALLATION WILL NOT BE APPROVED UNLESS ALL REQUIRED ROOT DEFLECTORS ARE INSTALLED.
3. INSTALL ROOT DEFLECTOR AGAINST STRUCTURE OR AS CLOSE TO STRUCTURE AS POSSIBLE. THE TOP OF ROOT DEFLECTOR SHALL BE SET ABOVE GRADE AS NOTED (NEVER BELOW GRADE) THE RAISED ROOT DEFLECTORS SHALL FACE TOWARDS TREE.
4. SEE TREE PLANTING DETAIL FOR TREE INSTALLATION.

B ROOT BARRIER

3/4"=1'-0"

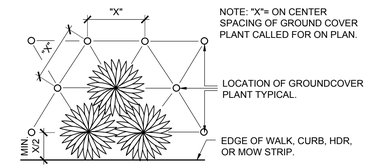

C GROUND COVER

NTS

STAFF APPRVL	REVISIONS NO.	REVISION	DATE	R.C.E.	EXP. DATE	CITY ENG.	DATE

PUBLIC IMPROVEMENTS APPROVED FOR CONSTRUCTION
CITY OF SANTA ROSA

BY: _____
DAVID M. GUHIN R.C.E. 65663
CITY ENGINEER
CITY OF SANTA ROSA

DATE: _____

CITY OF SANTA ROSA FILE NO. 2020-0022

CLIENT:
CHAMBERLAIN GROUP
655 SKYWAY, SUITE 230
SAN CARLOS
CALIFORNIA
94070
(650)-595-5582

CALL 811 BEFORE YOU DIG
811
SAFE DIGGING PARTNER

LICENSED LANDSCAPE ARCHITECT
JACK R. ABED
No. 3028
2/22
STATE OF CALIFORNIA

VAN DORN ABED
LANDSCAPE ARCHITECTS, INC.
81 14TH ST. SAN FRANCISCO, CA
ZIP 94103 PH (415) 864-7921 FAX(415) 864-4796

COPYRIGHT © 2005 VAN DORN ABED LANDSCAPE ARCHITECTS, INC.
ALL DRAWINGS & WRITTEN MATERIAL, APPEARING HEREIN CONSTITUTE ORIGINAL WORK OF VAN DORN ABED LANDSCAPE ARCHITECTS & SHALL NOT BE DUPLICATED, USED OR DISCLOSED WITHOUT WRITTEN CONSENT OF THE LANDSCAPE ARCHITECT.

PROJECT MANAGER: MW
DRAWN BY: HN
CHECKED BY: ZA

PROJECT NAME/LOCATION:
THE ARBORS
SANTA ROSA CA.
DRAWING TITLE:
LANDSCAPE CONSTRUCTION DRAWINGS

REVISIONS: NO.	DESCRIPTION:	BY:	DATE

SHEET TITLE:
LANDSCAPE DETAILS

SCALE: AS NOTED
ISSUE DATE: 08/14/20
PROJECT NO.: V0646
SHEET NO.: L2.1

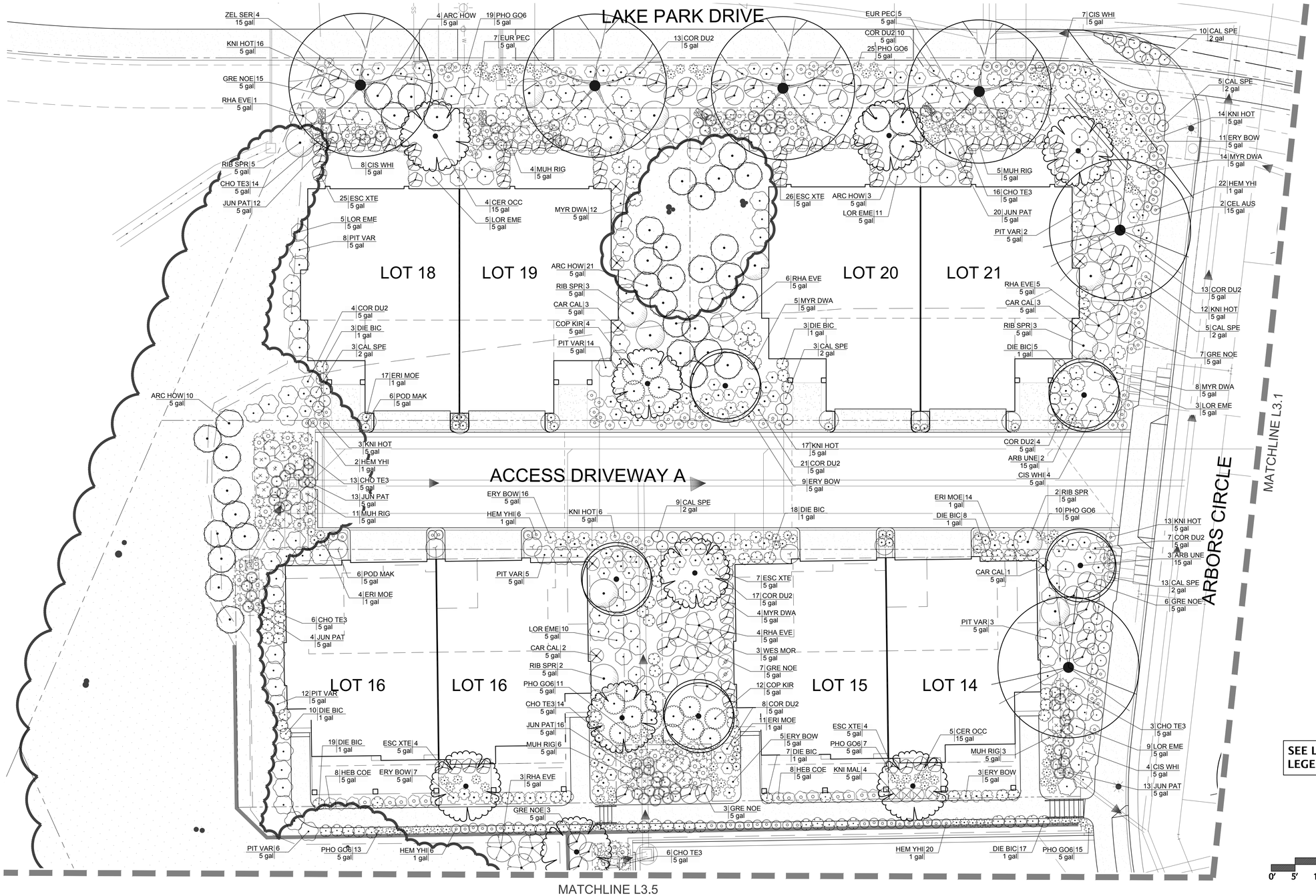

STAFF APPRVL	NO.	REVISION	DATE	R.C.E.	EXP. DATE	CITY ENG.	DATE

REVISIONS

PUBLIC IMPROVEMENTS APPROVED FOR CONSTRUCTION

CITY OF SANTA ROSA

BY: _____

DAVID M. GUHIN R.C.E. 65663
CITY ENGINEER
CITY OF SANTA ROSA

DATE: _____

CITY OF SANTA ROSA FILE NO. 2020-0022

CLIENT:
CHAMBERLAIN GROUP
655 SKYWAY, SUITE 230
SAN CARLOS
CALIFORNIA
94070
(650)-595-5582

CALL 811 BEFORE YOU DIG
811
SAFE DIGGING PARTNER

LICENSED LANDSCAPE ARCHITECT
JACK R. ABED
No. 3202
Exp. 1/22
STATE OF CALIFORNIA

VAN DORN ABED
LANDSCAPE ARCHITECTS, INC.
81 14TH ST. SAN FRANCISCO, CA
ZIP 94103 PH (415) 864-1921 FAX(415) 864-4796

COPYRIGHT © 2006 VAN DORN, ABED LANDSCAPE ARCHITECTS, INC.
ALL DRAWINGS, WRITTEN MATERIAL, APPEARING HEREIN CONSTITUTE ORIGINAL WORK OF VAN DORN, ABED LANDSCAPE ARCHITECTS & SHALL NOT BE DUPLICATED, USED OR DISCLOSED WITHOUT WRITTEN CONSENT OF THE LANDSCAPE ARCHITECT.

PROJECT MANAGER: MW
DRAWN BY: HN
CHECKED BY: ZA

PROJECT NAME/LOCATION:
THE ARBORS
SANTA ROSA CA.

DRAWING TITLE:
LANDSCAPE CONSTRUCTION DRAWINGS

REVISIONS:

NO.	DESCRIPTION:	BY:	DATE

SHEET TITLE:
PLANTING PLAN

SCALE: 1"=10'-0"
ISSUE DATE: 08/14/20
PROJECT NO.: V0646
SHEET NO.: L3.0

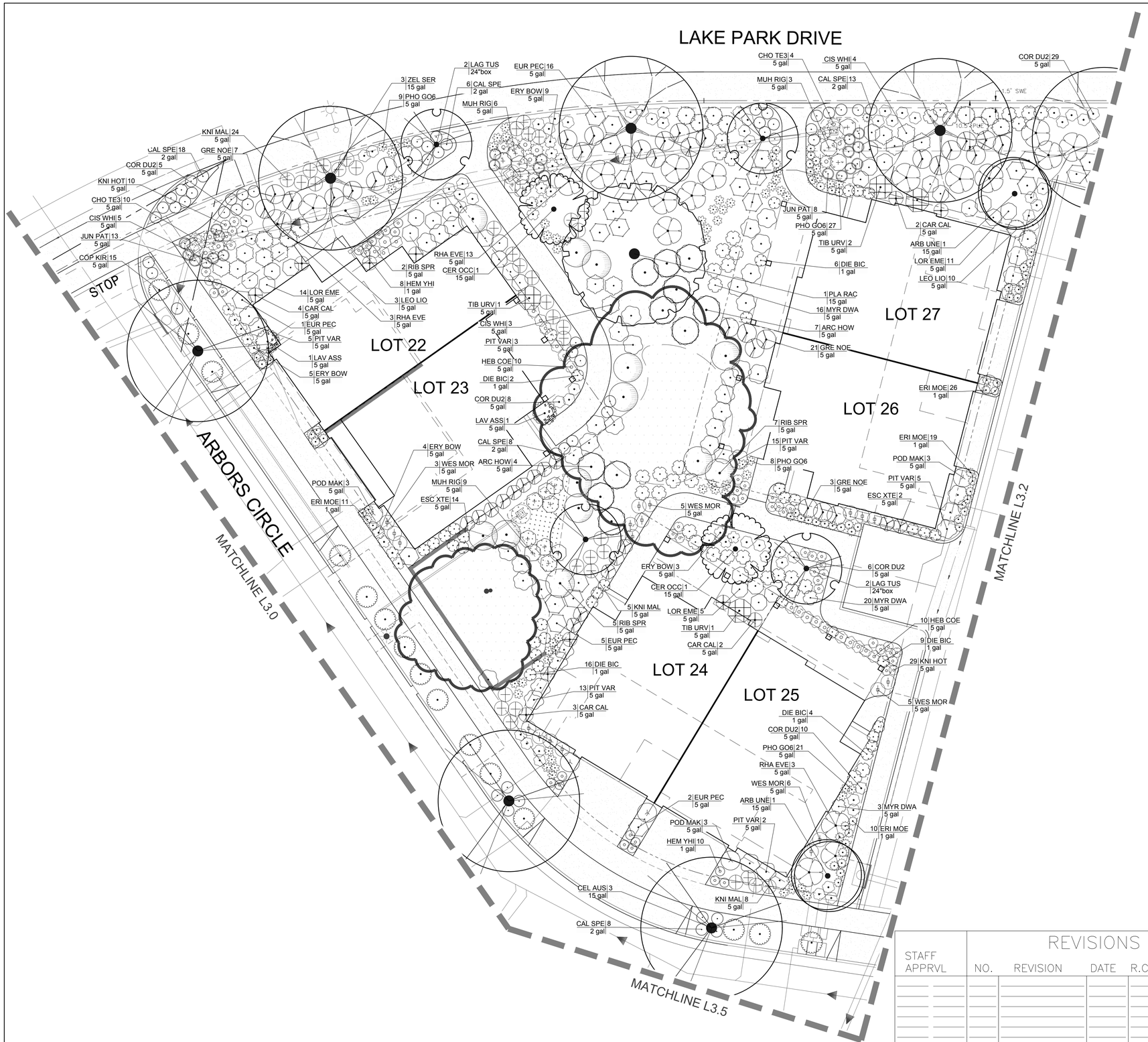

STAFF APPRVL		NO.	REVISION	DATE	R.C.E.	EXP. DATE	CITY ENG.	DATE

REVISIONS

PUBLIC IMPROVEMENTS APPROVED FOR CONSTRUCTION

CITY OF SANTA ROSA

BY: _____

DAVID M. GUHIN R.C.E. 65663
CITY ENGINEER
CITY OF SANTA ROSA

DATE: _____

CITY OF SANTA ROSA FILE NO. 2020-0022

CLIENT:
CHAMBERLAIN GROUP
655 SKYWAY, SUITE 230
SAN CARLOS
CALIFORNIA
94070
(650)-595-5582

CALL 811 BEFORE YOU DIG
811
SAFE DIGGING PARTNER

LICENSED LANDSCAPE ARCHITECT
JACK R. ABED
Lic. No. 3028
Exp. 1/22
STATE OF CALIFORNIA

VAN DORN ABED
LANDSCAPE ARCHITECTS, INC.
81 14TH ST. SAN FRANCISCO, CA
ZIP 94103 PH (415) 864-7921 FAX(415) 864-4796

COPYRIGHT © 2006 VAN DORN, ABED LANDSCAPE ARCHITECTS, INC.
ALL DRAWINGS, WRITTEN MATERIAL, APPEARING HEREIN CONSTITUTE ORIGINAL, UNPUBLISHED WORK OF THE LANDSCAPE ARCHITECTS AND MAY NOT BE DUPLICATED, USED OR DISCLOSED WITHOUT WRITTEN CONSENT OF THE LANDSCAPE ARCHITECTS.

PROJECT MANAGER: MW
DRAWN BY: HN
CHECKED BY: ZA

PROJECT NAME/LOCATION:
THE ARBORS
SANTA ROSA, CA.

DRAWING TITLE:
LANDSCAPE CONSTRUCTION DRAWINGS

REVISIONS: NO.	DESCRIPTION	BY:	DATE

SHEET TITLE:
PLANTING PLAN

SCALE: 1"=10'-0"
ISSUE DATE: 08/14/20
PROJECT NO.: V0646
SHEET NO.: L3.1

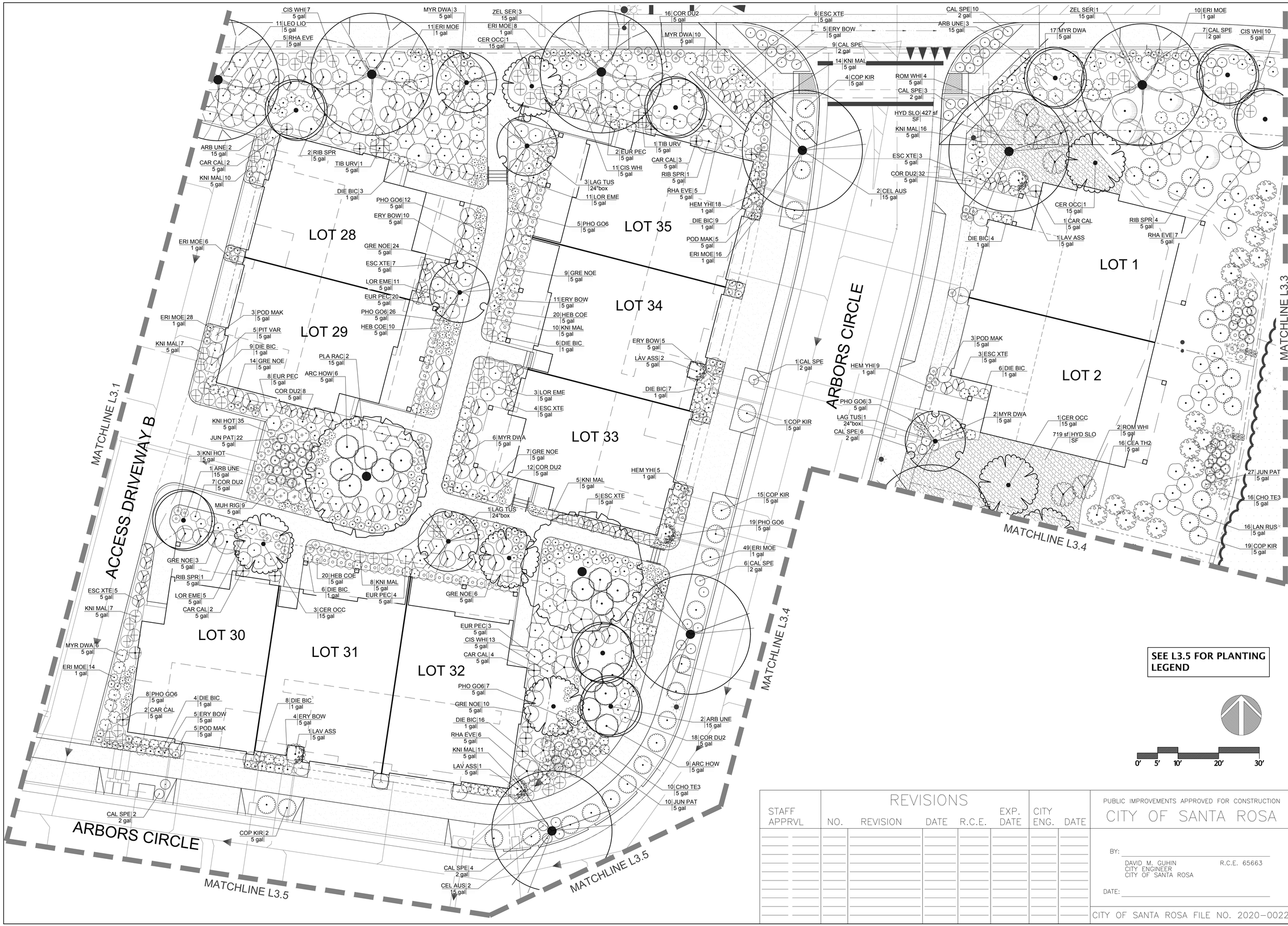

STAFF APPRVL	NO.	REVISION	DATE	R.C.E.	EXP. DATE	CITY ENG.	DATE

REVISIONS

PUBLIC IMPROVEMENTS APPROVED FOR CONSTRUCTION

CITY OF SANTA ROSA

BY: _____

DAVID M. GUHIN R.C.E. 65663
CITY ENGINEER
CITY OF SANTA ROSA

DATE: _____

CITY OF SANTA ROSA FILE NO. 2020-0022

CLIENT:

CHAMBERLAIN GROUP
655 SKYWAY, SUITE 230
SAN CARLOS
CALIFORNIA
94070
(650)-595-5582

CALL 811 BEFORE YOU DIG
811
SAFE DIGGING PARTNER

LICENSED LANDSCAPE ARCHITECT
JACK R. ABED
Lic. No. 3102
Date 8/14/20
STATE OF CALIFORNIA

VAN DORN ABED
LANDSCAPE ARCHITECTS, INC.
81 14TH ST. SAN FRANCISCO, CA
ZIP 94103 PH (415) 864-1921 FAX(415) 864-4796

COPYRIGHT © 2006 VAN DORN ABED LANDSCAPE ARCHITECTS, INC.
ALL DRAWINGS, WRITTEN MATERIAL, APPEARING HEREIN CONSTITUTE ORIGINAL WORK OF VAN DORN ABED LANDSCAPE ARCHITECTS & SHALL NOT BE REPRODUCED, CHANGED OR COPIED IN ANY FORM OR MANNER WITHOUT THE CONSENT OF THE LANDSCAPE ARCHITECT.

PROJECT MANAGER: MW
DRAWN BY: HN
CHECKED BY: ZA

PROJECT NAME/LOCATION:
THE ARBORS
SANTA ROSA CA.

DRAWING TITLE:
LANDSCAPE CONSTRUCTION DRAWINGS

REVISIONS: NO.	DESCRIPTION	BY:	DATE

SHEET TITLE:
PLANTING PLAN

SCALE: 1"=10'-0"
ISSUE DATE: 08/14/20
PROJECT NO.: V0646
SHEET NO.: L3.2
40 OF 59

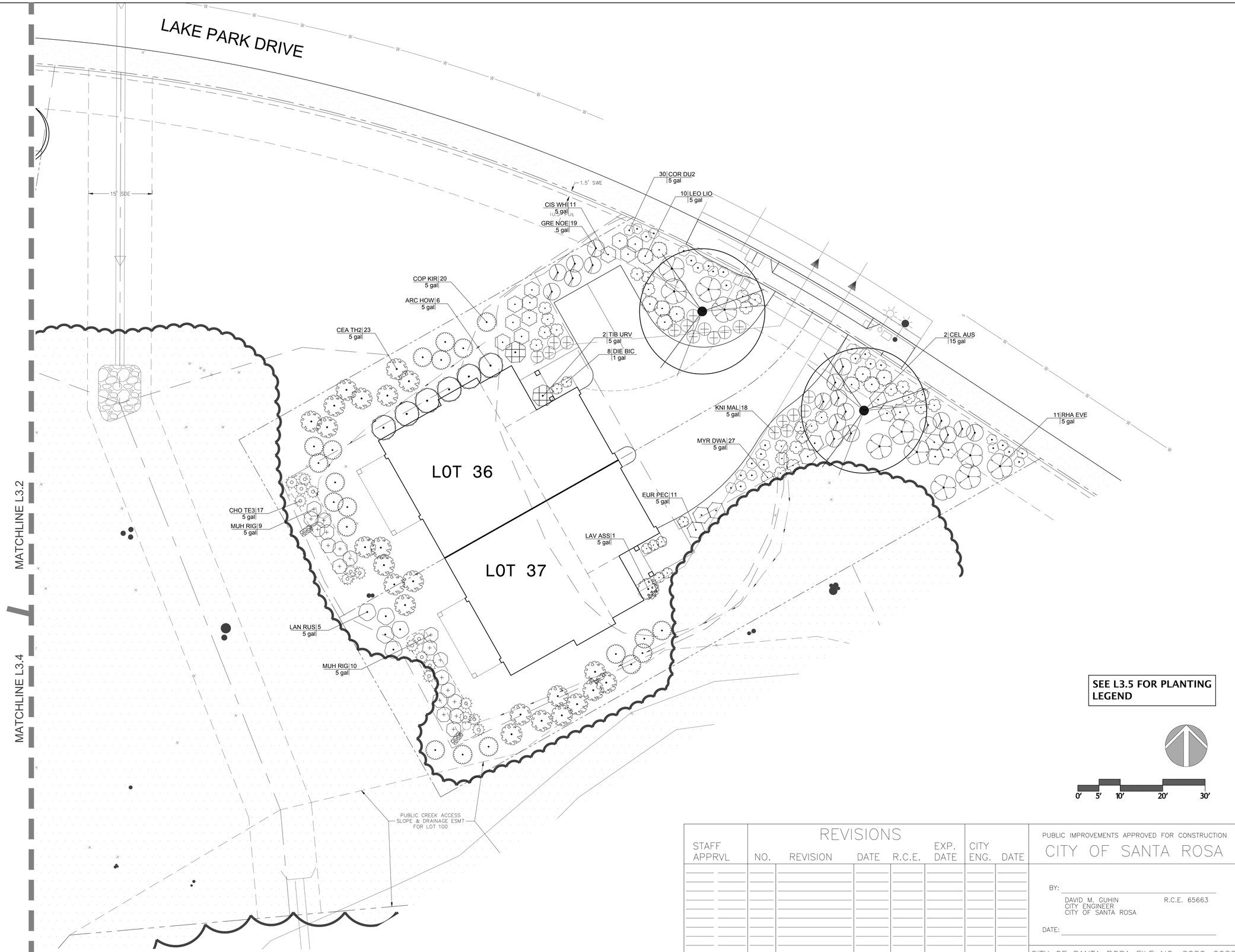

STAFF APPRVL	NO.	REVISION	DATE	R.C.E.	EXP. DATE	CITY ENG.	DATE

REVISIONS

PUBLIC IMPROVEMENTS APPROVED FOR CONSTRUCTION
CITY OF SANTA ROSA

BY: _____
DAVID M. GUHIN R.C.E. 65663
CITY ENGINEER
CITY OF SANTA ROSA

DATE: _____

CITY OF SANTA ROSA FILE NO. 2020-0022

CLIENT:
CHAMBERLAIN GROUP
655 SKYWAY, SUITE 230
SAN CARLOS
CALIFORNIA
94070
(650)-595-5582

CALL 811 BEFORE YOU DIG
811
SAFE DIGGING PARTNER

LICENSED LANDSCAPE ARCHITECT
JACK R. ABED
STATE OF CALIFORNIA

VAN DORN ABED
LANDSCAPE ARCHITECTS, INC.
81 14TH ST. SAN FRANCISCO, CA
ZIP 94103 PH (415) 864-1921 FAX(415) 864-4796

COPYRIGHT © 2006 VAN DORN, ABED LANDSCAPE ARCHITECTS, INC.
ALL DRAWINGS ARE THE PROPERTY OF VAN DORN, ABED LANDSCAPE ARCHITECTS & SHALL NOT BE REPRODUCED, PUBLISHED OR USED WITHOUT WRITTEN CONSENT OF THE LANDSCAPE ARCHITECT.

PROJECT MANAGER: MW
DRAWN BY: HN
CHECKED BY: ZA

PROJECT NAME/LOCATION:
THE ARBORS
SANTA ROSA, CA.

DRAWING TITLE:
LANDSCAPE CONSTRUCTION DRAWINGS

REVISIONS: NO.	DESCRIPTION	BY:	DATE

SHEET TITLE:
PLANTING PLAN

SCALE: 1"=10'-0"
ISSUE DATE: 08/14/20
PROJECT NO.: V0646
SHEET NO.: L3.3
41 of 59

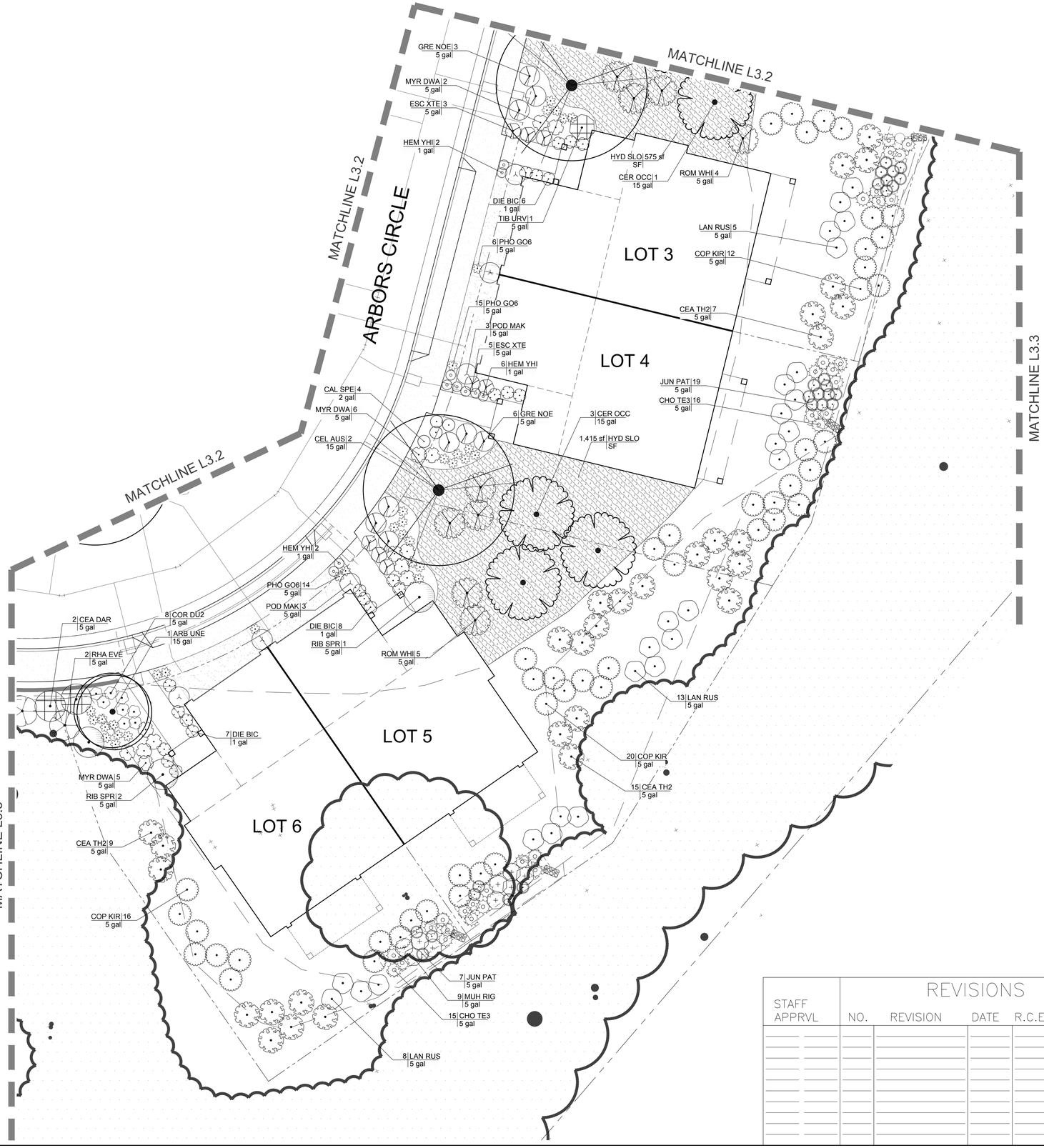

SEE L3.5 FOR PLANTING LEGEND

STAFF APPRVL	REVISIONS NO.	REVISION	DATE	R.C.E.	EXP. DATE	CITY ENG.	DATE

PUBLIC IMPROVEMENTS APPROVED FOR CONSTRUCTION
CITY OF SANTA ROSA

BY: _____
DAVID M. GUHIN R.C.E. 65663
CITY ENGINEER
CITY OF SANTA ROSA

DATE: _____

CITY OF SANTA ROSA FILE NO. 2020-0022

CLIENT:
CHAMBERLAIN GROUP
655 SKYWAY, SUITE 230
SAN CARLOS
CALIFORNIA
94070
(650)-595-5582

CALL 811 BEFORE YOU DIG
811
SAFE DIGGING PARTNER

LICENSED LANDSCAPE ARCHITECT
JACK R. ABED
Lic. No. 3108
2/22
STATE OF CALIFORNIA

VAN DORN ABED
LANDSCAPE ARCHITECTS, INC.
81 14TH ST. SAN FRANCISCO, CA
ZIP 94103 PH (415) 864-1921 FAX(415) 864-4796

PROJECT MANAGER: MW
DRAWN BY: HN
CHECKED BY: ZA

COPYRIGHT © 2006 VAN DORN ABED LANDSCAPE ARCHITECTS, INC.
ALL DRAWINGS ARE INSTRUMENTS OF SERVICE AND ARE THE PROPERTY OF VAN DORN ABED ARCHITECTS & SHALL NOT BE REPRODUCED, USED OR DISTRIBUTED WITHOUT THE WRITTEN CONSENT OF THE LANDSCAPE ARCHITECT.

PROJECT NAME/LOCATION:
THE ARBORS
SANTA ROSA CA.

DRAWING TITLE:
LANDSCAPE CONSTRUCTION DRAWINGS

REVISIONS: NO.	DESCRIPTION:	BY:	DATE

SHEET TITLE:
PLANTING PLAN

SCALE: 1"=10'-0"
ISSUE DATE: 08/14/20
PROJECT NO.: V0646
SHEET NO.: L3.4

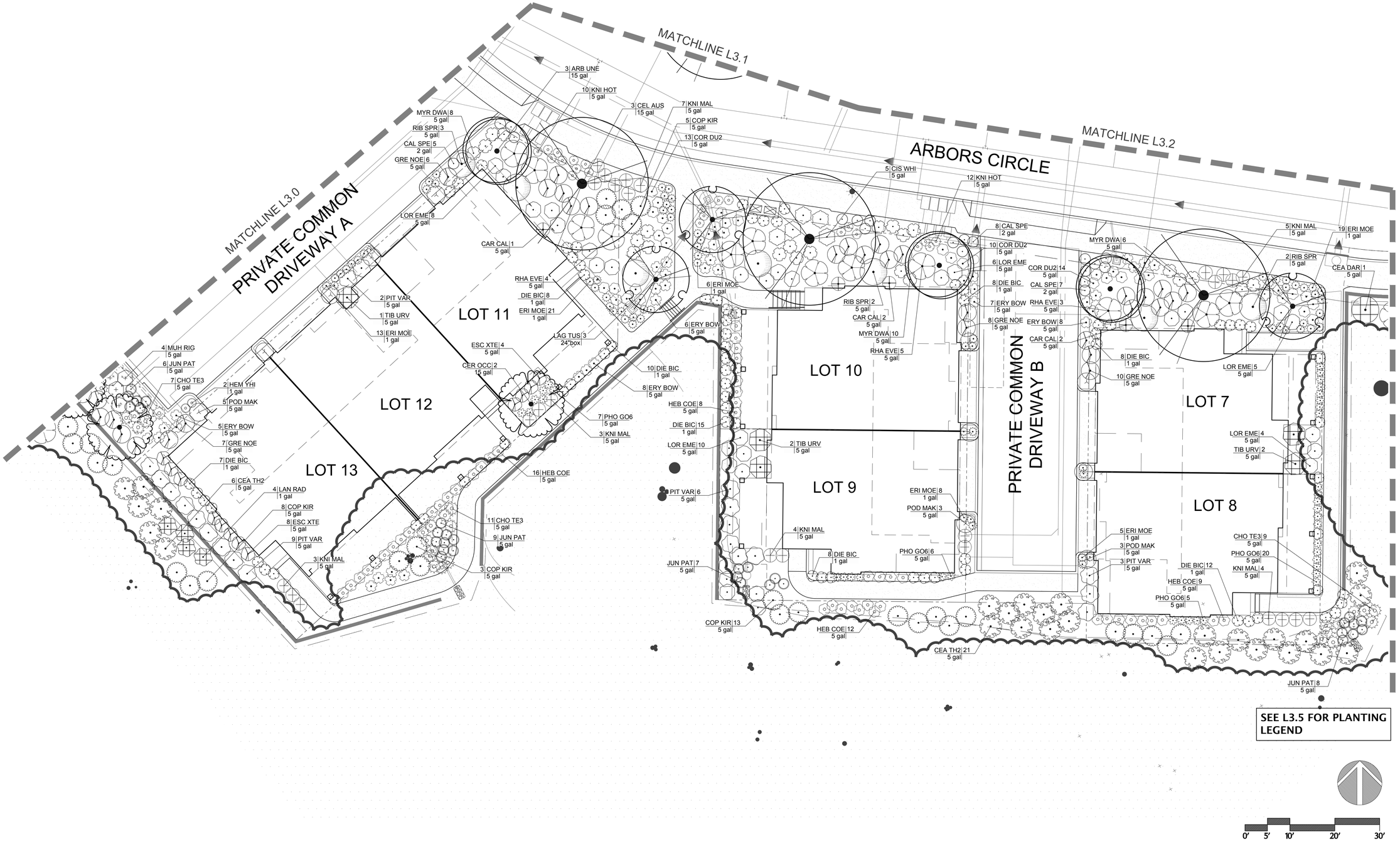

STAFF APPRVL		REVISIONS NO.	REVISION	DATE	R.C.E.	EXP. DATE	CITY ENG.	DATE

PUBLIC IMPROVEMENTS APPROVED FOR CONSTRUCTION

CITY OF SANTA ROSA

BY: _____

DAVID M. GUHIN R.C.E. 65663
CITY ENGINEER
CITY OF SANTA ROSA

DATE: _____

CITY OF SANTA ROSA FILE NO. 2020-0022

CLIENT:

CHAMBERLAIN GROUP
655 SKYWAY, SUITE 230
SAN CARLOS
CALIFORNIA
94070
(650)-595-5582

CALL 811 BEFORE YOU DIG
811
SAFE DIGGING PARTNER

LICENSED LANDSCAPE ARCHITECT
JACK R. ABED
Lic. No. 3102
Exp. 1/22
STATE OF CALIFORNIA

VAN DORN ABED
LANDSCAPE ARCHITECTS, INC.
81 14TH ST. SAN FRANCISCO, CA
ZIP 94103 PH (415) 864-9321 FAX(415) 864-4796

PROJECT MANAGER: MW
DRAWN BY: HN
CHECKED BY: ZA

COPYRIGHT © 2006 VAN DORN ABED LANDSCAPE ARCHITECTS, INC.
ALL DRAWINGS, WRITTEN MATERIAL, APPEARING HEREIN CONSTITUTE ORIGINAL WORK OF VAN DORN ABED LANDSCAPE ARCHITECTS & SHALL NOT BE REPRODUCED, CHANGED OR COPIED IN ANY FORM OR MANNER WITHOUT THE CONSENT OF THE LANDSCAPE ARCHITECT.

PROJECT NAME/LOCATION:
THE ARBORS
SANTA ROSA, CA.

DRAWING TITLE:
LANDSCAPE CONSTRUCTION DRAWINGS

REVISIONS:

NO.	DESCRIPTION	BY:	DATE

SHEET TITLE:
PLANTING PLAN

SCALE: 1"=10'-0"
ISSUE DATE: 08/14/20
PROJECT NO.: V0646
SHEET NO.: L3.5
43 of 59

PLANT SCHEDULE

TREES	CODE	BOTANICAL NAME	COMMON NAME	CONT	QTY	REMARKS
	ARB UNE	ARBUTUS UNEDO	STRAWBERRY TREE SHRUB	15 GAL	19	L
	CEL AUS	CELTIS AUSTRALIS	EUROPEAN HACKBERRY	15 GAL	16	L
	CER OCC	CERCIS OCCIDENTALIS	WESTERN REDBUD	15 GAL	23	VL
	LAG TUS	LAGERSTROEMIA X `TUSCARORA`	CRAPE MYRTLE CORAL PINK	24"BOX	12	L
	PLA RAC	PLATANUS RACEMOSA	CALIFORNIA SYCAMORE	15 GAL	3	M
	ZEL SER	ZELKOVA SERRATA	SAWLEAF ZELKOVA	15 GAL	11	M

SHRUBS	CODE	BOTANICAL NAME	COMMON NAME	CONT.	QTY	REMARKS
	ARC HOW	ARCTOSTAPHYLOS DENSIFLORA `HOWARD MCMINN`	HOWARD MCMINN MANZANITA	5 GAL	70	L
	CAL SPE	CALANDRINIA SPECTABILIS	PINK CALANDRINIA	2 GAL	173	L
	CAR CAL	CARPENTERIA CALIFORNICA	BUSH ANEMONE	5 GAL	39	M
	CEA TH2	CEANOTHUS THYRSIFLORUS- `LOUIS EDMONDS"	BLUE BLOSSOM	5 GAL	97	L
	CEA DAR	CEANOTHUS X `DARK STAR`	DARK STAR WILD LILAC	5 GAL	3	M
	CIS WHI	CISTUS X BLANCHE	WHITE ROCKROSE	5 GAL	92	L
	COP KIR	COPROSMA KIRKII	CREEPING MIRROR PLANT	5 GAL	169	L
	COR DU2	CORREA X `DUSKY BELLS`	AUSTALIAN FUCHSIA	5 GAL	323	L
	DIE BIC	DIETES BICOLOR	FORTNIGHT LILY	1 GAL	310	L
	ERI MOE	ERIGERON KARVINSKIANUS `MOERHEIMII`	PINK SANTA BARBARA DAISY	1 GAL	326	L
	ERY BOW	ERYSIMUM X `BOWLES` MAUVE`	WALLFLOWER	5 GAL	146	L
	ESC XTE	ESCALLONIA X `TERRI`	TERRI ESCALLONIA	5 GAL	135	M
	EUR PEC	EURYOPS PECTINATUS	GOLDEN DAISY BUSH	5 GAL	84	L
	GRE NOE	GREVILLEA X `NOELLII`	GREVILLEA	5 GAL	204	L
	HEB COE	HEBE X `COED`	HEBE	5 GAL	131	M
	HEM YHI	HEMEROCALLIS X HYBRID	HYBRID DAYLILY	1 GAL	118	M
	KNI MAL	KNIPHOFIA UVARIA `MALIBU YELLOW`	MALIBU YELLOW TORCH LILY	5 GAL	173	L
	KNI HOT	KNIPHOFIA UVARIA `ORANGE`	ORANGE HOT POKER	5 GAL	180	L
	LAN RUS	LANTANA CAMARA `GOLD RUSH` TM	GOLD RUSH BUSH LANTANA	5 GAL	47	L
	LAN RAD	LANTANA CAMARA `RADIATION`	RADIATION LANTANA	1 GAL	4	L
	LAV ASS	LAVATERA ASSURGENTIFLORA	MALLOW	5 GAL	8	L
	LEO LIO	LEONOTIS LEONURUS	LION`S TAIL	5 GAL	34	L
	LOR EME	LOROPETALUM CHINENSE `EMERALD SNOW`	EMERALD SNOW LOROPETALUM	5 GAL	136	L
	MYR DWA	MYRTUS COMMUNIS `COMPACTA`	DWARF MYRTLE	5 GAL	190	L
	PHO GO6	PHORMIUM TENAX `GOLD SWORD`	NEW ZEALAND FLAX	5 GAL	318	L
	PIT VAR	PITTOSPORUM TOBIRA `VARIEGATA`	VARIEGATED MOCK ORANGE	5 GAL	118	L
	POD MAK	PODOCARPUS MACROPHYLLUS `MAKI`	MAKI SHRUBBY YEW PODOCARPUS	5 GAL	54	M
	RHA EVE	RHAMNUS CALIFORNICA `EVE CASE`	CALIFORNIA COFFEEBERRY	5 GAL	86	L
	RIB SPR	RIBES SANGUINEUM `SPRING SHOWERS`	PINK FLOWERING CURRANT	5 GAL	47	L
	ROM WHI	ROMNEYA COULTERI `WHITE CLOUD`	WHITE CLOUD MATILIJA POPPY	5 GAL	15	VL
	TIB URV	TIBOUCHINA URVILLEANA	PRINCESS FLOWER	5 GAL	14	M
	WES MOR	WESTRINGIA FRUTICOSA `MORNING LIGHT`	MORNING LIGHT COAST ROSEMARY	5 GAL	22	L

BIORETENTION PLANTS	CODE	BOTANICAL NAME	COMMON NAME	CONT.	QTY	REMARKS
	CHO TE3	CHONDROPETALUM TECTORUM	CAPE RUSH	5 GAL	187	M
	JUN PAT	JUNCUS PATENS	CALIFORNIA GRAY RUSH	5 GAL	214	L
	MUH RIG	MUHLENBERGIA RIGENS	DEER GRASS	5 GAL	88	L

GROUND COVERS	CODE	BOTANICAL NAME	COMMON NAME	CONT	SPACING	QTY	REMARKS
	HYD SLO	HYDROSEED SLOPES	HYDROSEED SLOPES	SF		3,135 SF	

NON-IRRIGATION HYRDOSEED (ON OPEN SPACE GRADED SLOPE AREAS)

NON-IRRIGATED HYDROSEED. MIX CONSIST OF:

LBS. PER ACRE	ITEM	PURITY/ GERMINATION
10	ZORRO FESCUS	98%/ 85%
10	MOLATE FESCUS	98%/ 85%
6	IDAHO FESCUS	98%/ 85%
5	CRIMSON CLOVER	99%/ 90%
2	COAST RANGE MELIC	90%/ 80%
2	CALIFORNIA POPPY	95%/ 80%
2	ARROYO LUPINE	99%/ 80%
1	BLUE EYED GRASS	98%/ 80%
1	FAREWELL TO SPRING	98%/ 80%

SOIL CONDITIONER/ FERTILIZER: BIOSOL AT 800 LB. PER ACRE

TURBO START: AT ONE GALLON PER ACRE

SOIL BINDING AGENT: SENTINEL AT 150LB. PER ACRE

HYDROSEED MIX AVAILABLE AT: CONTACT S&S SEEDS: (805) 684-0436, www.sssseeds.com OR PACIFIC COAST SEED: 925-373-4417, http://www.pcseed.com FOR HYDROSEED MIX ABOVE OR SIMILAR.

NOTE:

A FINAL CITY INSPECTION SHALL BE PERFORMED. THE INSTALLATION CONTRACTOR SHALL ATTEND THIS INSPECTION AND MAKE A REQUIRED REPAIRS AND ADJUSTMENTS TO ARCHIVE APPROVAL AND COMPLETION FROM THE CITY. CONTACT YOUR BUILDING INSPECTOR PRIOR TO FINAL INSPECTION REGARDING WELO SIGN OFF.

STAFF APPRVL		REVISIONS NO.	REVISION	DATE	R.C.E.	EXP. DATE	CITY ENG.	DATE

PUBLIC IMPROVEMENTS APPROVED FOR CONSTRUCTION

CITY OF SANTA ROSA

BY: _____

DAVID M. GUHIN R.C.E. 65663
CITY ENGINEER
CITY OF SANTA ROSA

DATE: _____

CITY OF SANTA ROSA FILE NO. 2020-0022

CLIENT:
CHAMBERLAIN GROUP
655 SKYWAY, SUITE 230
SAN CARLOS
CALIFORNIA
94070
(650)-595-5582

CALL 811 BEFORE YOU DIG
811
SAFE DIGGING PARTNER

LICENSED LANDSCAPE ARCHITECT
JACK R. ABED
Date 1/22
STATE OF CALIFORNIA

VAN DORN ABED
LANDSCAPE ARCHITECTS, INC.
81 14TH ST. SAN FRANCISCO, CA
ZIP 94103 PH (415) 864-7921 FAX(415) 864-4796

COPYRIGHT © 2006 VAN DORN ABED LANDSCAPE ARCHITECTS, INC.

ALL DRAWINGS, WRITTEN MATERIAL, APPEARING HEREIN CONSTITUTE ORIGINAL WORK OF VAN DORN ABED LANDSCAPE ARCHITECTS & SHALL NOT BE DUPLICATED, USED OR DISCLOSED WITHOUT WRITTEN CONSENT OF THE LANDSCAPE ARCHITECT.

PROJECT MANAGER: MW
DRAWN BY: HN
CHECKED BY: ZA

PROJECT NAME/LOCATION:
THE ARBORS
SANTA ROSA, CA.

DRAWING TITLE:
LANDSCAPE CONSTRUCTION DRAWINGS

REVISIONS:

NO.	DESCRIPTION	BY:	DATE

SHEET TITLE:
PLANTING LEGEND

SCALE: N/A
ISSUE DATE: 08/14/20
PROJECT NO.: V0646
SHEET NO.: L3.6

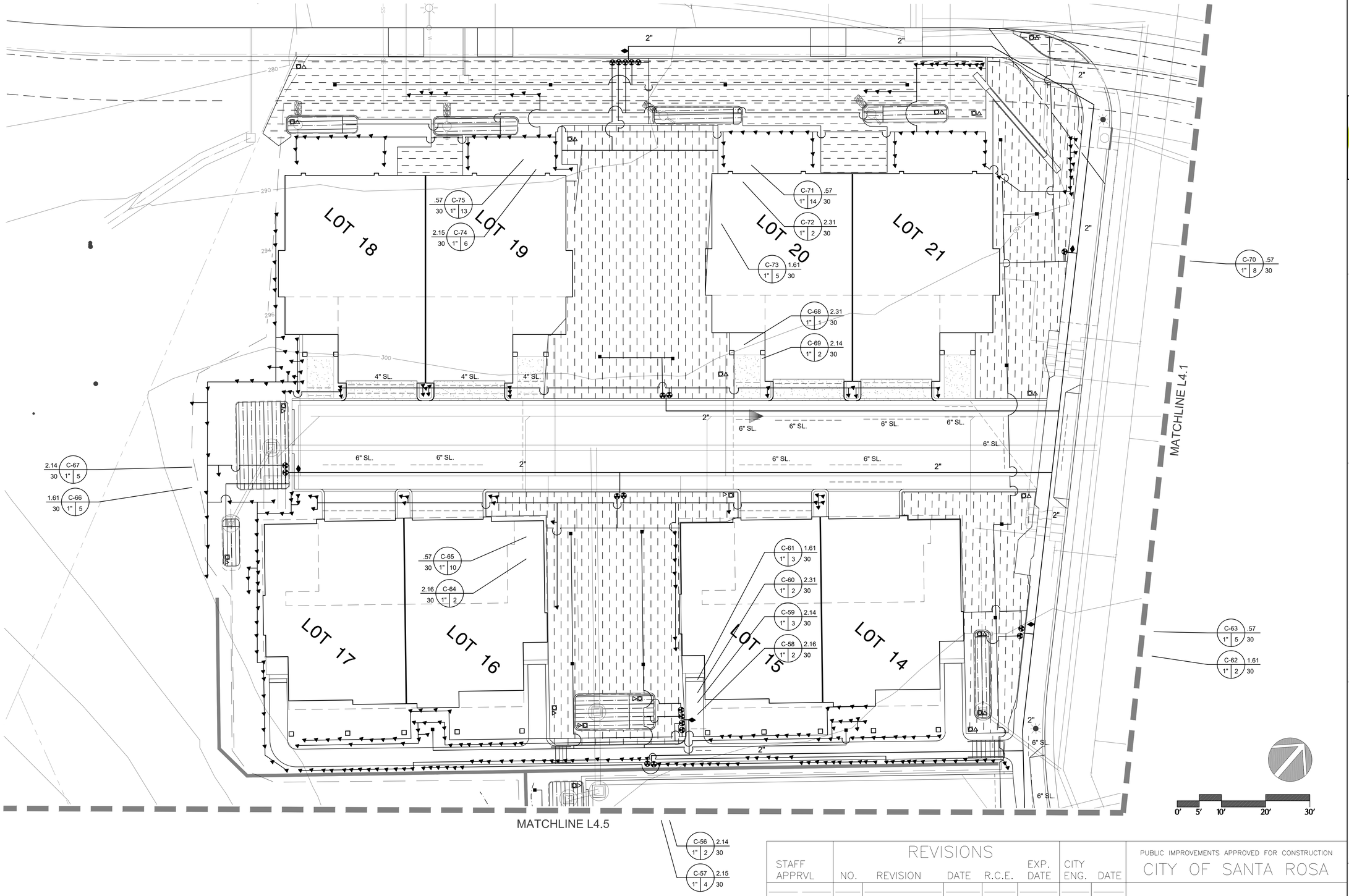

BROOKWATER
IRRIGATION CONSULTANTS
480 ST. JOHN STREET, SUITE 220
PLEASANTON, CALIFORNIA 94566
TEL 925.855.0417 FAX 925.855.0357
E-MAIL JANET@BROOKWATER.COM

STAFF APPRVL	NO.	REVISION	DATE	R.C.E.	EXP. DATE	CITY ENG.	DATE

REVISIONS

PUBLIC IMPROVEMENTS APPROVED FOR CONSTRUCTION
CITY OF SANTA ROSA

BY: _____
DAVID M. GUHIN R.C.E. 65663
CITY ENGINEER
CITY OF SANTA ROSA

DATE: _____

CITY OF SANTA ROSA FILE NO. 2020-0022

CLIENT:
CHAMBERLAIN GROUP
655 SKYWAY, SUITE 230
SAN CARLOS
CALIFORNIA
94070
(650)-595-5582

CALL 811 BEFORE YOU DIG
811
SAFE DIGGING PARTNER

LICENSED LANDSCAPE ARCHITECT
TERI R. ABED
STATE OF CALIFORNIA

VAN DORN ABED
LANDSCAPE ARCHITECTS, INC.
81 14TH ST. SAN FRANCISCO, CA
ZIP 94103 PH (415) 864-7921 FAX(415) 864-4796

COPYRIGHT © 2006 VAN DORN ABED LANDSCAPE ARCHITECTS, INC.
ALL DRAWINGS, WRITTEN MATERIAL, APPEARING HEREIN CONSTITUTE ORIGINAL WORK OF VAN DORN ABED LANDSCAPE ARCHITECTS AND MUST BE REPRODUCED, PUBLISHED & COPIED ONLY WITH WRITTEN CONSENT OF THE LANDSCAPE ARCHITECT.

PROJECT MANAGER: MW
DRAWN BY: STAFF
CHECKED BY: ZA

PROJECT NAME/LOCATION:
THE ARBORS
SANTA ROSA CA.

DRAWING TITLE:
LANDSCAPE CONSTRUCTION DRAWINGS

REVISIONS: NO.	DESCRIPTION	BY:	DATE

SHEET TITLE:
IRRIGATION PLAN

SCALE: 1"=10'-0"
ISSUE DATE: 08/14/20
PROJECT NO.: V0646
SHEET NO.: L4.0
45 OF 59

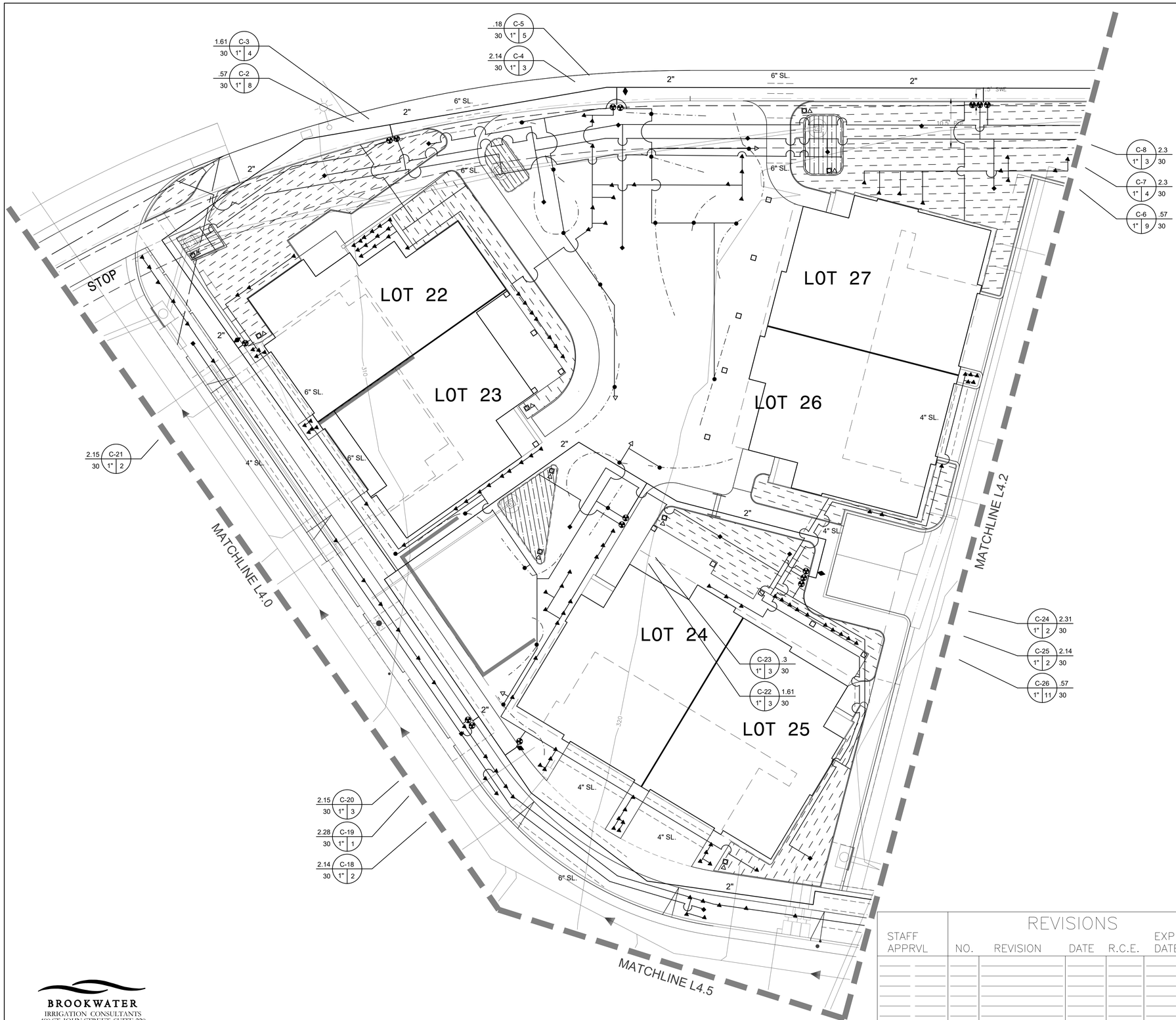

BROOKWATER
IRRIGATION CONSULTANTS
480 ST. JOHN STREET, SUITE 220
PLEASANTON, CALIFORNIA 94566
TEL 925.855.0417 FAX 925.855.0357
E-MAIL JANET@BROOKWATER.COM

STAFF APPRVL	NO.	REVISION	DATE	R.C.E.	EXP. DATE	CITY ENG.	DATE

REVISIONS

PUBLIC IMPROVEMENTS APPROVED FOR CONSTRUCTION
CITY OF SANTA ROSA

BY: _____
DAVID M. GUHIN R.C.E. 65663
CITY ENGINEER
CITY OF SANTA ROSA

DATE: _____

CITY OF SANTA ROSA FILE NO. 2020-0022

CLIENT:
CHAMBERLAIN GROUP
655 SKYWAY, SUITE 230
SAN CARLOS
CALIFORNIA
94070
(650)-595-5582

CALL 811 BEFORE YOU DIG
811
SAFE DIGGING PARTNER

LICENSED LANDSCAPE ARCHITECT
TERI R. ABED
STATE OF CALIFORNIA

VAN DORN ABED
LANDSCAPE ARCHITECTS, INC.
81 14TH ST. SAN FRANCISCO, CA
ZIP 94103 PH (415) 864-1921 FAX(415) 864-4796

PROJECT MANAGER: MW
DRAWN BY: STAFF
CHECKED BY: ZA

COPYRIGHT © 2006 VAN DORN, ABED LANDSCAPE ARCHITECTS, INC.
ALL DRAWINGS, WRITTEN MATERIAL, APPEARING HEREIN CONSTITUTE ORIGINAL WORK OF VAN DORN, ABED LANDSCAPE ARCHITECTS & SHALL NOT BE REPRODUCED, CHANGED OR COPIED IN ANY FORM OR MANNER WITHOUT THE CONSENT OF THE LANDSCAPE ARCHITECT.

PROJECT NAME/LOCATION:
THE ARBORS
SANTA ROSA
DRAWING TITLE:
LANDSCAPE CONSTRUCTION DRAWINGS

REVISIONS:

NO.	DESCRIPTION:	BY:	DATE

SHEET TITLE:
IRRIGATION PLAN

SCALE: 1"=10'-0"
ISSUE DATE: 08/14/20
PROJECT NO.: V0646
SHEET NO.: L4.1
46 OF 59

BROOKWATER
IRRIGATION CONSULTANTS
480 ST. JOHN STREET, SUITE 220
PLEASANTON, CALIFORNIA 94566
TEL 925.855.0417 FAX 925.855.0357
E-MAIL JANET@BROOKWATER.COM

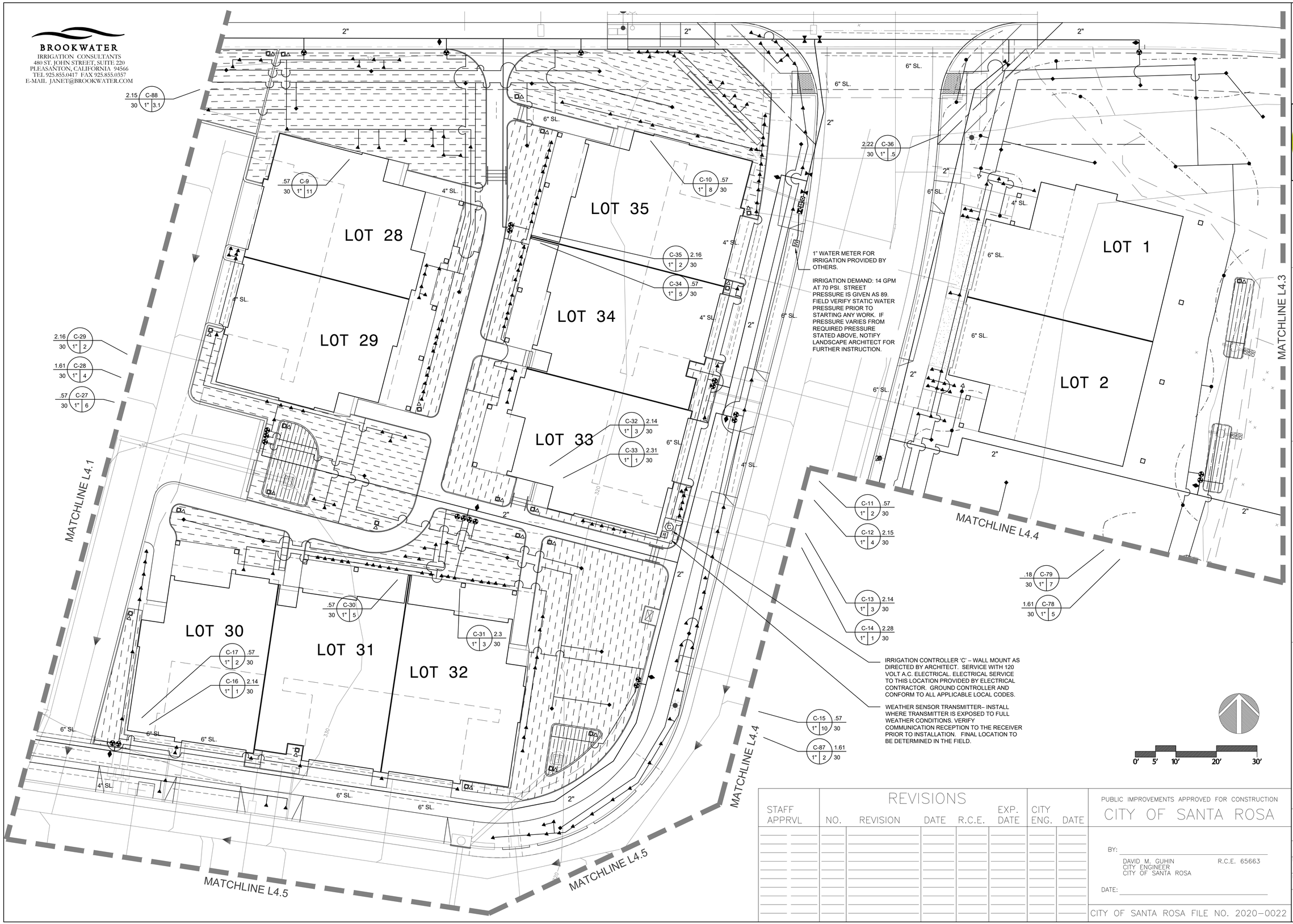

STAFF APPRVL	NO.	REVISION	DATE	R.C.E.	EXP. DATE	CITY ENG.	DATE

REVISIONS

PUBLIC IMPROVEMENTS APPROVED FOR CONSTRUCTION
CITY OF SANTA ROSA

BY: _____
DAVID M. GUHIN R.C.E. 65663
CITY ENGINEER
CITY OF SANTA ROSA

DATE: _____

CITY OF SANTA ROSA FILE NO. 2020-0022

CLIENT:
CHAMBERLAIN GROUP
655 SKYWAY, SUITE 230
SAN CARLOS
CALIFORNIA
94070
(650)-595-5582

CALL 811 BEFORE YOU DIG
811
SAFE DIGGING PARTNER

LICENSED LANDSCAPE ARCHITECT
TERI R. ABED
STATE OF CALIFORNIA

VAN DORN ABED
LANDSCAPE ARCHITECTS, INC.
81 14TH ST. SAN FRANCISCO, CA
ZIP 94103 PH (415) 864-7921 FAX(415) 864-4796

COPYRIGHT © 2006 VAN DORN ABED LANDSCAPE ARCHITECTS, INC.
ALL DRAWINGS, WRITTEN MATERIAL, APPEARING HEREIN CONSTITUTE ORIGINAL WORK OF VAN DORN ABED LANDSCAPE ARCHITECTS & SHALL NOT BE REPRODUCED, CHANGED OR COPIED IN ANY FORM OR MANNER WITHOUT THE EXPRESS WRITTEN CONSENT OF THE LANDSCAPE ARCHITECT.

PROJECT MANAGER: MW
DRAWN BY: STAFF
CHECKED BY: ZA

PROJECT NAME/LOCATION:
THE ARBORS
SANTA ROSA CA.

DRAWING TITLE:
LANDSCAPE CONSTRUCTION DRAWINGS

REVISIONS: NO.	DESCRIPTION:	BY:	DATE:

SHEET TITLE:
IRRIGATION PLAN

SCALE: 1"=10'-0"
ISSUE DATE: 08/14/20
PROJECT NO.: V0646
SHEET NO.: L4.2
47 OF 59

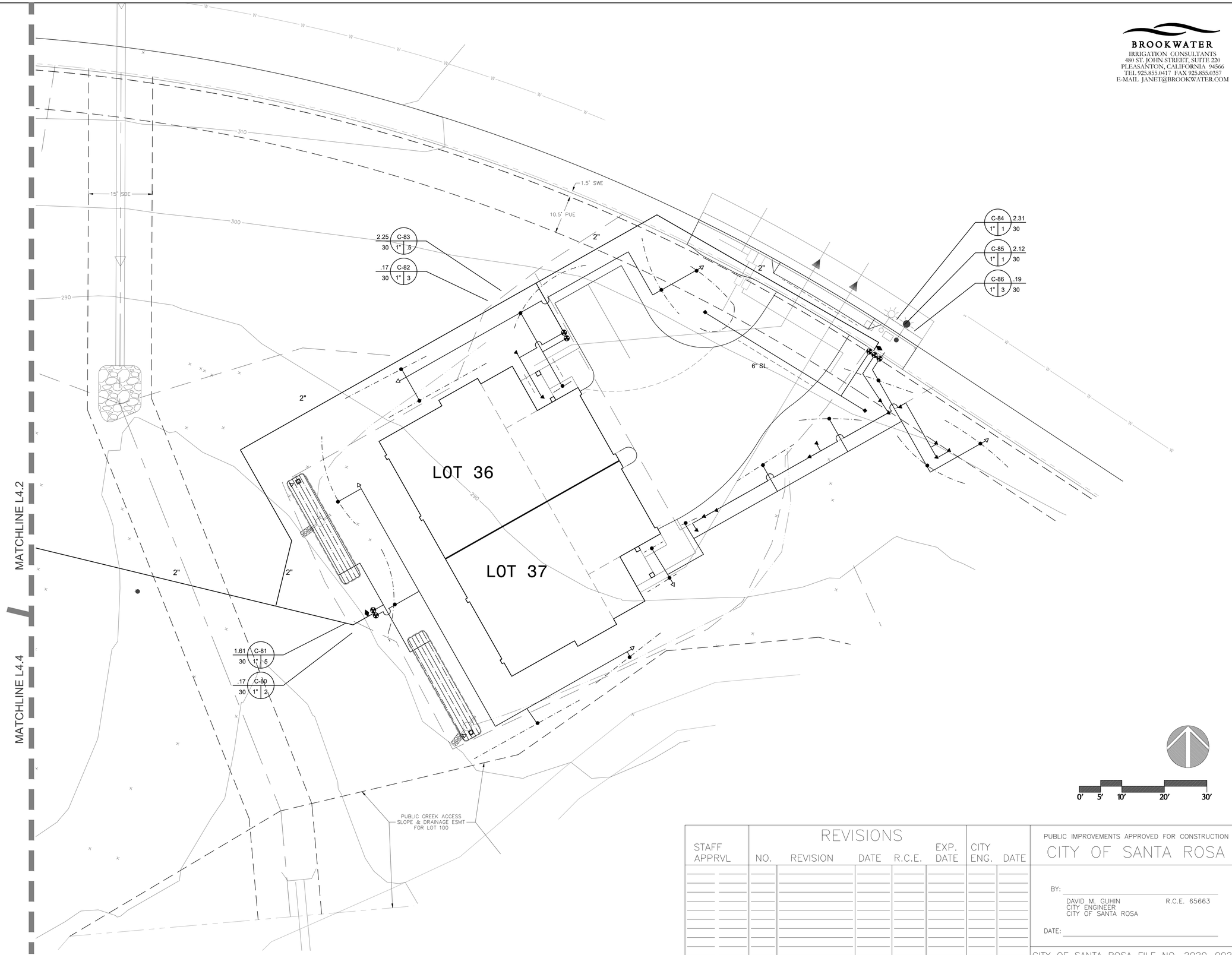

BROOKWATER
IRRIGATION CONSULTANTS
480 ST. JOHN STREET, SUITE 220
PLEASANTON, CALIFORNIA 94566
TEL 925.855.0417 FAX 925.855.0357
E-MAIL JANET@BROOKWATER.COM

CLIENT:
CHAMBERLAIN GROUP
655 SKYWAY, SUITE 230
SAN CARLOS
CALIFORNIA
94070
(650)-595-5582

CALL 811 BEFORE YOU DIG
811
SAFE DIGGING PARTNER

LICENSED LANDSCAPE ARCHITECT
TERI R. ABED
STATE OF CALIFORNIA

VAN DORN ABED
LANDSCAPE ARCHITECTS, INC.
81 14TH ST. SAN FRANCISCO, CA
ZIP 94103 PH (415) 864-1921 FAX(415) 864-4796

PROJECT MANAGER: MW
DRAWN BY: STAFF
CHECKED BY: ZA

COPYRIGHT © 2006 VAN DORN ABED LANDSCAPE ARCHITECTS, INC.
ALL DRAWINGS, WRITTEN MATERIAL, APPEARING HEREIN CONSTITUTE ORIGINAL WORK OF VAN DORN ABED LANDSCAPE ARCHITECTS, INC. AND MAY NOT BE REPRODUCED, PUBLISHED OR DISCLOSED TO OTHERS WITHOUT WRITTEN CONSENT OF THE LANDSCAPE ARCHITECT.

PROJECT NAME/LOCATION:
THE ARBORS
SANTA ROSA, CA.
DRAWING TITLE:
LANDSCAPE CONSTRUCTION DRAWINGS

REVISIONS:

NO.	DESCRIPTION	BY:	DATE

SHEET TITLE:
IRRIGATION PLAN

SCALE: 1"=10'-0"
ISSUE DATE: 08/14/20
PROJECT NO.: V0646
SHEET NO.: L4.3
48 of 59

REVISIONS

STAFF APPRVL	NO.	REVISION	DATE	R.C.E.	EXP. DATE	CITY ENG.	DATE

PUBLIC IMPROVEMENTS APPROVED FOR CONSTRUCTION
CITY OF SANTA ROSA

BY: _____
DAVID M. GUHIN R.C.E. 65663
CITY ENGINEER
CITY OF SANTA ROSA

DATE: _____

CITY OF SANTA ROSA FILE NO. 2020-0022

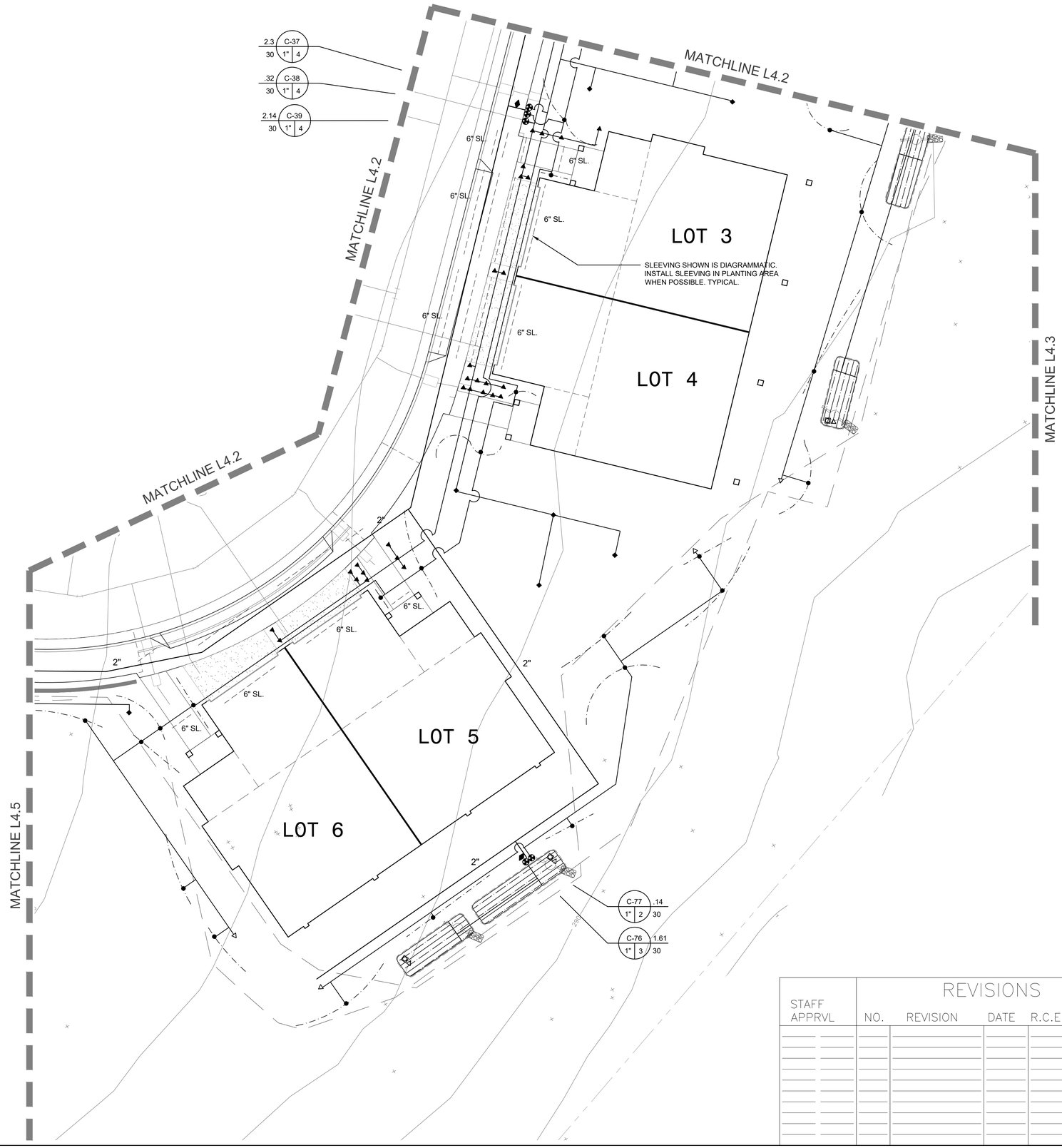

BROOKWATER
IRRIGATION CONSULTANTS
480 ST. JOHN STREET, SUITE 220
PLEASANTON, CALIFORNIA 94566
TEL 925.855.0417 FAX 925.855.0357
E-MAIL JANET@BROOKWATER.COM

STAFF APPRVL	NO.	REVISION	DATE	R.C.E.	EXP. DATE	CITY ENG.	DATE

REVISIONS

PUBLIC IMPROVEMENTS APPROVED FOR CONSTRUCTION
CITY OF SANTA ROSA

BY: _____
DAVID M. GUHIN R.C.E. 65663
CITY ENGINEER
CITY OF SANTA ROSA

DATE: _____

CITY OF SANTA ROSA FILE NO. 2020-0022

CLIENT:
CHAMBERLAIN GROUP
655 SKYWAY, SUITE 230
SAN CARLOS
CALIFORNIA
94070
(650)-595-5582

CALL 811 BEFORE YOU DIG
SAFE DIGGING PARTNER

LICENSED LANDSCAPE ARCHITECT
ZEKI R. ABED
STATE OF CALIFORNIA

VAN DORN ABED
LANDSCAPE ARCHITECTS, INC.
81 14TH ST. SAN FRANCISCO, CA
ZIP 94103 PH (415) 864-7921 FAX(415) 864-4796

COPYRIGHT © 2006 VAN DORN ABED LANDSCAPE ARCHITECTS, INC.
ALL DRAWINGS, WRITTEN MATERIAL, APPEARING HEREIN CONSTITUTE ORIGINAL WORK OF VAN DORN ABED LANDSCAPE ARCHITECTS AND ARE NOT TO BE REPRODUCED, CHANGED OR COPIED IN ANY FORM OR MANNER WHATSOEVER, WITHOUT THE EXPRESS WRITTEN CONSENT OF THE LANDSCAPE ARCHITECT.

PROJECT MANAGER: MW
DRAWN BY: STAFF
CHECKED BY: ZA

PROJECT NAME/LOCATION:
THE ARBORS
SANTA ROSA CA.

DRAWING TITLE:
LANDSCAPE CONSTRUCTION DRAWINGS

REVISIONS: NO.	DESCRIPTION	BY:	DATE

SHEET TITLE:
IRRIGATION PLAN

SCALE: 1"=10'-0"
ISSUE DATE: 08/14/20
PROJECT NO.: V0646
SHEET NO.: L4.4

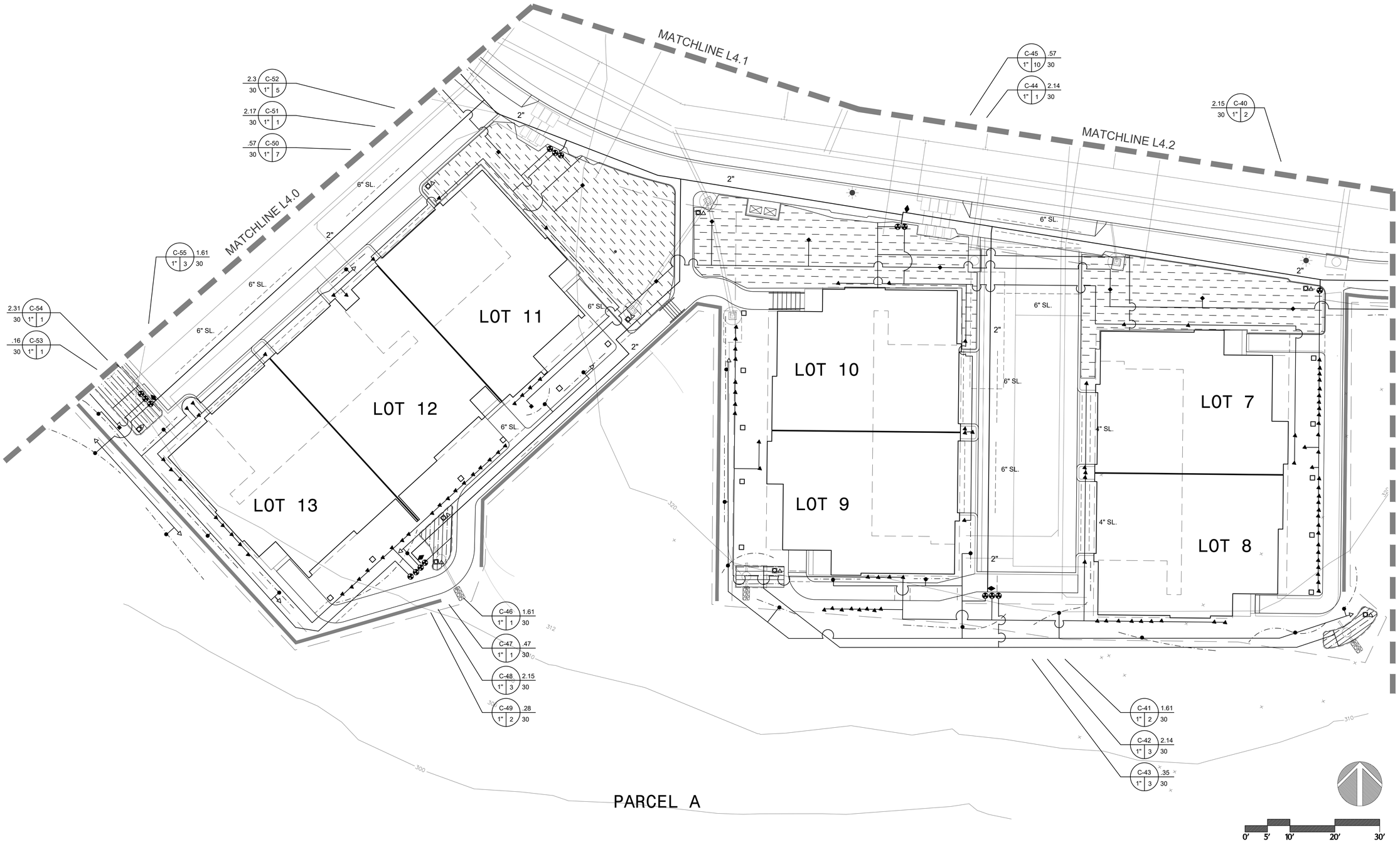

STAFF APPRVL	REVISIONS NO.	REVISION	DATE	R.C.E.	EXP. DATE	CITY ENG.	DATE

PUBLIC IMPROVEMENTS APPROVED FOR CONSTRUCTION

CITY OF SANTA ROSA

BY: _____

DAVID M. GUHIN
CITY ENGINEER
CITY OF SANTA ROSA

R.C.E. 65663

DATE: _____

CITY OF SANTA ROSA FILE NO. 2020-0022

BROOKWATER
IRRIGATION CONSULTANTS
480 ST. JOHN STREET, SUITE 220
PLEASANTON, CALIFORNIA 94566
TEL 925.855.0417 FAX 925.855.0357
E-MAIL JANET@BROOKWATER.COM

CLIENT:
CHAMBERLAIN GROUP
655 SKYWAY, SUITE 230
SAN CARLOS
CALIFORNIA
94070
(650)-595-5582

CALL 811 BEFORE YOU DIG
811
SAFE DIGGING PARTNER

LICENSED LANDSCAPE ARCHITECT
TERI R. ABED
STATE OF CALIFORNIA

VAN DORN ABED
LANDSCAPE ARCHITECTS, INC.
81 14TH ST. SAN FRANCISCO, CA
ZIP 94103 PH (415) 864-7921 FAX(415) 864-4796

COPYRIGHT © 2006 VAN DORN ABED LANDSCAPE ARCHITECTS, INC.

ALL DRAWINGS, WRITTEN MATERIAL, APPEARING HEREIN CONSTITUTE ORIGINAL WORK OF VAN DORN ABED LANDSCAPE ARCHITECTS & SHALL NOT BE REPRODUCED, CHANGED OR COPIED IN ANY FORM OR MANNER WITHOUT THE WRITTEN CONSENT OF THE LANDSCAPE ARCHITECT.

PROJECT MANAGER: MW
DRAWN BY: STAFF
CHECKED BY: ZA

PROJECT NAME/LOCATION:
THE ARBORS
SANTA ROSA, CA.

DRAWING TITLE:
LANDSCAPE CONSTRUCTION DRAWINGS

REVISIONS:

NO.	DESCRIPTION	BY:	DATE

SHEET TITLE:
IRRIGATION PLAN

SCALE: 1"=10'-0"

ISSUE DATE: 08/14/20

PROJECT NO.: V0646

SHEET NO.: L4.5

IRRIGATION LEGEND

SYMBOL	MODEL NUMBER	DESCRIPTION	PSI	FLOW RATE (GPM)
▲	DB-04-PC-CV	TORO PRESSURE COMPENSATING DRIP BUBBLER INSTALL ONE BUBBLER PER SHRUB	40	4 GPH
■	DB-09-PC-CV	TORO PRESSURE COMPENSATING DRIP BUBBLER INSTALL TWO BUBBLERS PER TREE	40	9 GPH
NOT SHOWN	T-DPC04-DC, T-DPC02-DC	TORO NGE SINGLE OUTLET EMITTER	40	1 GPH, 1/2 GPH
●	-	COMPRESSION FITTING STUB-OUT FROM PVC RIGID PIPE TO POLY TUBING		
△	T-FCH-H-FIPT	TORO DL2000 FLUSH VALVE		
NOT SHOWN	T-YD-500-34	TORO DL2000 AIR VENT		
	T-DL-MP9	TORO DL2000 POP-UP OPERATION INDICATOR		
	DZK-700 / LT-1000-T / TW-D-x	TORO DRIP ZONE VALVE KIT - INCL. REMOTE CONTROL VALVE, WYE FILTER WITH 150 MESH SCREEN, AND PRESET PRESSURE REGULATOR / KBI SCH 80 PVC BALL VALVE / RAIN MASTER TWO WIRE DECODER		
	100-2SLLVC/075-MHS	TORO QUICK COUPLING VALVE WITH 3/4" HOSE SWIVEL		
	T-113-LF	NIBCO LEAD FREE GATE VALVE (LINE SIZE)		
	FSI-T15-000	CST 1 1/2" FLOW SENSOR		
	2160-L / TW-D-1	GRISWOLD 2" MASTER CONTROL VALVE (NORMALLY OPEN) WITH RAIN MASTER DECODER		
	LF825Y-2" / GS-2	FEBCO LEAD-FREE REDUCED PRESSURE BACKFLOW PREVENTER IN GUARDSHACK ENCLOSURE		
R	RS-1000	IRRITROL WIRELESS RAIN SENSOR MOUNTED TO SIDE OF ENCLOSURE		
C	EGP-TWi PMR-KIT	RAINMASTER TWO-WIRE CONTROLLER WITH i-CARD IN STAINLESS STEEL ENCLOSURE PRO MAX MAINTENANCE REMOTE KIT		

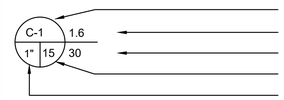

CONTROLLER AND STATION NUMBER
APPLICATION RATE (INCHES)
OPERATING PRESSURE (PSI)
APPROXIMATE GALLONS PER MINUTE
REMOTE CONTROL VALVE SIZE

MAIN LINE: 1120-SCHEDULE 40 PVC SOLVENT WELD PLASTIC PIPE WITH SCHEDULE 80 AND SCHEDULE 40 PVC SOLVENT WELD FITTINGS. 18" COVER.

LATERAL LINE: 1120-CLASS 200 PSI PVC SOLVENT WELD PIPE WITH SCHEDULE 40 PVC SOLVENT WELD FITTINGS. 12" COVER.

DRIP TUBING; TORO T-EHD1645 BLUE STRIPE HOSE WITH TORO LOC-EZE FITTINGS. 4" COVER. DISTRIBUTION TUBING: TORO EHW0437-010 1/4" HOSE.

SUB-SURFACE DRIPLINE: TORO DL2000 RGP-212-10 DRIPLINE WITH ROOT GUARD. USE ONLY DL2000 DRIPLINE TRI-LOC FITTINGS. 2" COVER. (12" EMITTER SPACING; .53 GPH PER EMITTER)

SUB-SURFACE DRIPLINE: TORO DL2000 RGP-412-10 DRIPLINE WITH ROOT GUARD. USE ONLY DL2000 DRIPLINE TRI-LOC FITTINGS. 2" COVER. (12" EMITTER SPACING; 1.0 GPH PER EMITTER)

SLEEVE (SL): 1120-CLASS 200 PVC PLASTIC PIPE. 24" COVER.

LATERAL LINE SIZING CHART

SPRINKLER TYPE	GPM	NO. OF BUBBLERS*	PIPE SIZE
BUBBLERS - 4 GPH	1-5 5.1-15	1-75 76-225	3/4" 1"
BUBBLERS - 9 GPH	1-5 5.1-15	1-32 33-96	3/4" 1"

* QUANTITY INDICATES NO. OF BUBBLERS, NOT NO. OF TREES. THERE ARE TWO BUBBLERS PER TREE AND ONE BUBBLER PER SHRUB. LATERAL LINE FROM REMOTE CONTROL VALVE TO FIRST BUBBLER SHALL BE 1" MINIMUM.

DRIP EMITTER LINE SIZING CHART

NO. OF MULTI OUTLET EMITTERS	PIPE SIZE
1-50 51-100 101-150	3/4" 1" 1 1/4"

BROOKWATER
IRRIGATION CONSULTANTS
480 ST. JOHN STREET, SUITE 220
PLEASANTON, CALIFORNIA 94566
TEL 925.855.0417 FAX 925.855.0357
E-MAIL JANET@BROOKWATER.COM

STAFF APPRVL	REVISIONS NO.	REVISION	DATE	R.C.E.	EXP. DATE	CITY ENG.	DATE

PUBLIC IMPROVEMENTS APPROVED FOR CONSTRUCTION
CITY OF SANTA ROSA

BY: _____
DAVID M. GUHIN R.C.E. 65663
CITY ENGINEER
CITY OF SANTA ROSA

DATE: _____

CITY OF SANTA ROSA FILE NO. 2020-0022

CLIENT:
CHAMBERLAIN GROUP
655 SKYWAY, SUITE 230
SAN CARLOS
CALIFORNIA
94070
(650)-595-5582

CALL 811 BEFORE YOU DIG
811
SAFE DIGGING PARTNER

LICENSED LANDSCAPE ARCHITECT
LEE R. ABED
STATE OF CALIFORNIA

VAN DORN ABED
LANDSCAPE ARCHITECTS, INC.
81 14TH ST. SAN FRANCISCO, CA
ZIP 94103 PH (415) 864-7921 FAX(415) 864-4796

COPYRIGHT © 2006 VAN DORN ABED LANDSCAPE ARCHITECTS, INC.
ALL DRAWINGS, WRITTEN MATERIAL, APPEARING HEREON CONSTITUTE ORIGINAL WORK OF VAN DORN ABED LANDSCAPE ARCHITECTS & SHALL NOT BE REPRODUCED, CHANGED OR COPIED IN ANY FORM OR MANNER WITHOUT WRITTEN CONSENT OF THE LANDSCAPE ARCHITECT.

PROJECT MANAGER: MW
DRAWN BY: STAFF
CHECKED BY: ZA

PROJECT NAME/LOCATION:
THE ARBORS
SANTA ROSA CA.
DRAWING TITLE:
LANDSCAPE CONSTRUCTION DRAWINGS

REVISIONS: NO.	DESCRIPTION:	BY:	DATE

SHEET TITLE:
IRRIGATION LEGEND

SCALE: N/A
ISSUE DATE: 08/14/20
PROJECT NO.: V0646
SHEET NO.: L4.6

IRRIGATION NOTES

1. THE CONTRACTOR SHALL REVIEW RELATED DRAWINGS AND SHALL ENSURE COORDINATION WITH ALL APPLICABLE TRADES PRIOR TO SUBMITTING BID.

2. THE IRRIGATION SYSTEM SHALL BE INSTALLED IN CONFORMANCE WITH ALL APPLICABLE STATE AND LOCAL CODES AND ORDINANCES BY LICENSED CONTRACTORS AND EXPERIENCED WORKERS. CONTRACTOR SHALL OBTAIN AND PAY FOR ALL REQUIRED PERMITS AND FEES RELATING TO THEIR WORK.

3. THIS DESIGN IS DIAGRAMMATIC. ALL PIPING, VALVES, ETC. SHOWN WITHIN PAVED AREAS IS FOR DESIGN CLARIFICATION ONLY AND SHALL BE INSTALLED IN PLANTING AREAS WHERE POSSIBLE. AVOID ANY CONFLICTS BETWEEN THE IRRIGATION SYSTEM, PLANTING AND ARCHITECTURAL FEATURES.

4. PARALLEL PIPES MAY BE INSTALLED IN COMMON TRENCH. PIPES ARE NOT TO BE INSTALLED DIRECTLY ABOVE ONE ANOTHER. TRENCHES SHALL BE AMPLE SIZE TO PERMIT THE PIPES TO BE LAID AT THE ELEVATIONS INTENDED AND TO PERMIT SPACE FOR JOINING.

5. CONTRACTOR SHALL RESTORE SURFACES, EXISTING UNDERGROUND INSTALLATIONS, ETC., DAMAGED OR CUT AS A RESULT OF EXCAVATIONS, TO ORIGINAL CONDITIONS IN A MANNER APPROVED BY THE OWNER'S REPRESENTATIVE.

6. DO NOT WILLFULLY INSTALL THE IRRIGATION SYSTEM AS SHOWN ON THE DRAWINGS WHEN IT IS OBVIOUS IN THE FIELD THAT OBSTRUCTIONS, GRADE DIFFERENCES OR DIFFERENCES IN THE AREA DIMENSIONS EXIST THAT MIGHT NOT HAVE BEEN CONSIDERED IN THE ENGINEERING. SUCH OBSTRUCTIONS OR DIFFERENCES SHOULD BE BROUGHT TO THE ATTENTION OF THE OWNER'S AUTHORIZED REPRESENTATIVE. IN THE EVENT THAT THIS NOTIFICATION IS NOT PERFORMED, THE CONTRACTOR SHALL ASSUME FULL RESPONSIBILITY FOR ANY REVISIONS NECESSARY.

7. IT IS THE RESPONSIBILITY OF THE CONTRACTOR TO BECOME FAMILIAR WITH ALL GRADE DIFFERENCES, LOCATION OF WALLS, RETAINING WALLS, ETC. COORDINATE WORK WITH THE GENERAL CONTRACTOR AND OTHER SUBCONTRACTORS FOR THE LOCATION AND THE INSTALLATION OF PIPE SLEEVES THROUGH WALLS, UNDER ROADWAYS, PAVING, STRUCTURES, ETC. CONTRACTOR TO VERIFY THE LOCATION OF EXISTING UNDERGROUND UTILITIES AND STRUCTURES PRIOR TO THE EXCAVATION OF TRENCHES. CONTRACTOR IS TO REPAIR ANY DAMAGE CAUSED BY THEIR WORK AT NO ADDITIONAL COST TO THE OWNER.

8. DUE TO THE SCALE OF THE DRAWINGS, IT IS NOT POSSIBLE TO INDICATE ALL OFFSETS, FITTINGS, SLEEVES, ETC., WHICH MAY BE REQUIRED. CAREFULLY INVESTIGATE THE STRUCTURAL AND FINISHED CONDITIONS AFFECTING ALL WORK AND PLAN WORK ACCORDINGLY, FURNISHING SUCH FITTINGS, ETC., AS MAY BE REQUIRED TO MEET SUCH CONDITIONS. DRAWINGS ARE GENERALLY DIAGRAMMATIC AND INDICATIVE OF THE WORK TO BE INSTALLED. THE WORK SHALL BE INSTALLED IN SUCH A MANNER AS TO AVOID CONFLICTS BETWEEN IRRIGATION SYSTEMS, PLANTING, AND ARCHITECTURAL FEATURES.

9. ELECTRICAL CONTRACTOR TO SUPPLY 120 VAC (2.5 AMP) SERVICE TO CONTROLLER LOCATION. IRRIGATION CONTRACTOR TO MAKE FINAL CONNECTION FROM ELECTRICAL STUB-OUT TO CONTROLLER. IRRIGATION CONTROL WIRE SHALL BE #14, U.L. APPROVED FOR DIRECT BURIAL. COMMON WIRE SHALL BE #12 U.L. APPROVED AND SHALL BE WHITE IN COLOR. WIRING TO INDIVIDUAL REMOTE CONTROL VALVES SHALL BE COLOR OTHER THAN WHITE.

10. EACH CONTROLLER SHALL HAVE ITS OWN INDEPENDENT GROUND WIRE.

11. REMOTE CONTROL VALVES SHALL BE WIRED TO CONTROLLER IN SEQUENCE AS SHOWN ON PLANS. RUN WIRE FROM EACH RCV TO THE CONTROLLER. SPLICING WIRES TOGETHER OUTSIDE OF VALVE BOXES WILL NOT BE PERMITTED. ATTACH A LABEL TO CONTROL WIRE AT THE CONTROLLER AND ATTACH AN ID TAG AT EACH REMOTE CONTROL VALVE INDICATING CONTROLLER AND STATION NUMBER.

12. SPLICING OF 24-VOLT WIRES WILL NOT BE PERMITTED EXCEPT IN VALVE BOXES. LEAVE A 36" COIL OF EXCESS WIRE AT EACH SPLICE AND 100 FEET ON CENTER ALONG WIRE RUN. TAPE WIRE IN BUNDLES 10 FEET ON CENTER. NO TAPING PERMITTED INSIDE SLEEVES.

13. WIRE CONNECTORS SHALL BE 3M-DBR/Y-6 DIRECT BURY UNLESS OTHERWISE NOTED.

14. INSTALL TWO (2) SPARE CONTROL WIRES ALONG THE ENTIRE MAIN LINE. SPARE WIRES SHALL BE THE SAME COLOR (ONE WITH A WHITE STRIPE) AND OF A DIFFERENT COLOR THAN OTHER CONTROL WIRES. LOOP 36" EXCESS WIRE INTO EACH SINGLE VALVE BOX AND INTO ONE VALVE BOX IN EACH GROUP OF VALVES.

15. VALVE LOCATIONS SHOWN ARE DIAGRAMMATIC. INSTALL IN GROUND COVER/SHRUB AREAS WHERE POSSIBLE.

16. INSTALL VALVE BOXES MINIMUM 12" FROM AND PERPENDICULAR TO WALK, CURB, BUILDING OR LANDSCAPE FEATURE. AT MULTIPLE VALVE BOX GROUPS, EACH BOX SHALL BE AN EQUAL DISTANCE FROM THE WALK, CURB, ETC. AND EACH BOX SHALL BE MINIMUM 12" APART. SHORT SIDE OF VALVE BOXES SHALL BE PARALLEL TO WALK, CURB, ETC.

17. PRESSURE REGULATING DEVICES ARE REQUIRED IF WATER PRESSURE IS BELOW OR EXCEEDS THE RECOMMENDED PRESSURE OF THE SPECIFIED IRRIGATION DEVICES.

18. LOCATE QUICK COUPLING VALVE 12" FROM HARDSCAPE AREA.

19. THOROUGHLY FLUSH MAIN LINE BEFORE INSTALLING VALVES.

20. ALL SPRINKLER HEADS SHALL BE SET PERPENDICULAR TO FINISH GRADE OF THE AREA TO BE IRRIGATED UNLESS OTHERWISE DESIGNATED ON THE PLANS.

21. CHECK VALVES OR ANTI-DRAIN VALVES ARE REQUIRED ON ALL SPRINKLER HEADS WHERE LOW POINT DRAINAGE COULD OCCUR. FOR DRIP OR BUBBLER CIRCUITS, INSTALL KING BROS. CV SERIES CHECK VALVES IN LATERAL LINES FOR EVERY 10' OF ELEVATION CHANGE.

22. ALL MAIN LINES SHALL BE FLUSHED PRIOR TO THE INSTALLATION OF IRRIGATION, BUBBLERS AND DRIP TUBING. AT 30 DAYS AFTER INSTALLATION EACH SYSTEM SHALL BE FLUSHED TO ELIMINATE GLUE AND DIRT PARTICLES FROM THE LINES.

23. NOTIFY ARCHITECT OF ANY ASPECTS OF LAYOUT THAT WILL PROVIDE INCOMPLETE OR INSUFFICIENT WATER COVERAGE OF PLANT MATERIAL AND DO NOT PROCEED UNTIL HIS/HER INSTRUCTIONS ARE OBTAINED.

24. LOCATE BUBBLERS ON UPHILL SIDE OF TREES. TREE BUBBLERS ARE FOR ESTABLISHMENT AND DROUGHT CONDITIONS. THEY ARE TO BE TURNED OFF AFTER TREES ARE ESTABLISHED AND TURNED ON DURING DROUGHT CONDITIONS.

25. IN ADDITION TO THE SLEEVES AND CONDUITS SHOWN ON THE DRAWINGS, THE IRRIGATION CONTRACTOR SHALL BE RESPONSIBLE FOR COORDINATING THE INSTALLATION OF SLEEVES AND CONDUITS OF SUFFICIENT SIZE UNDER ALL PAVED AREAS.

26. ALL EXCAVATIONS ARE TO BE FILLED WITH COMPACTED BACKFILL. BACKFILL MATERIAL SHALL BE THE EARTH EXCAVATED FROM THE TRENCH AND FREE OF ROCKS AND OTHER FOREIGN COURSE MATERIAL. COMPACT BACKFULL TO A MINIMUM OF 90 PERCENT OF ORIGINAL SOIL DENSITY. REPAIR ALL SETTLED TRENCHES PROMPTLY, FOR A PERIOD OF 1 YEAR AFTER COMPLETION OF WORK.

27. CONTRACTOR SHALL WARRANT THAT THE IRRIGATION SYSTEM WILL BE FREE FROM DEFECTS IN MATERIALS AND WORKMANSHIP FOR A PERIOD OF 1 YEAR AFTER FINAL ACCEPTANCE OF WORK.

28. ALL CONSTANT PRESSURE PIPES SHALL BE TESTED AT A MINIMUM OF 125 PSI FOR TWO HOURS. CENTER LOAD PIPING WITH A SMALL AMOUNT OF BACKFILL TO PREVENT ARCHING OR SLIPPING UNDER PRESSURE. NO FITTINGS SHALL BE COVERED. REPAIR FAULTY JOINTS WITH NEW MATERIALS. DO NOT USE CEMENT OR CAULKING TO REPAIR LEAKS.

29. WHERE IT IS NECESSARY TO EXCAVATE ADJACENT TO EXISTING TREES, USE ALL POSSIBLE CARE TO AVOID INJURY TO TREES, AND TREE ROOTS. EXCAVATION IN AREAS WHERE 2 INCH AND LARGER ROOTS OCCUR SHALL BE DONE BY HAND. ROOTS 2 INCHES AND LARGER IN DIAMETER SHALL BE WRAPPED IN A PLASTIC BAG AND SECURED WITH A RUBBER BAND. TRENCHES ADJACENT TO TREE SHOULD BE CLOSED WITHIN 24 HOURS; WHERE THIS IS NOT POSSIBLE, THE SIDE OF THE TRENCH ADJACENT TO THE TREE SHALL BE KEPT SHADED WITH BURLAP OR CANVAS.

30. THE IRRIGATION SYSTEM DESIGN IS BASED ON THE MINIMUM OPERATING PRESSURE SHOWN ON THE IRRIGATION DRAWINGS. VERIFY WATER PRESSURE PRIOR TO CONSTRUCTION. REPORT ANY DIFFERENCE BETWEEN THE WATER PRESSURE INDICATED ON THE DRAWINGS AND THE ACTUAL PRESSURE READING AT THE IRRIGATION POINT OF CONNECTION TO THE OWNER'S AUTHORIZED REPRESENTATIVE.

31. IRRIGATION DEMAND: REFER TO IRRIGATION POINTS OF CONNECTION.

32. OPERATE IRRIGATION CONTROLLER(S) BETWEEN THE HOURS OF 10:00 PM AND 7:00 AM.

33. NOTIFY ALL LOCAL JURISDICTIONS FOR INSPECTION AND TESTING OF INSTALLED BACKFLOW PREVENTION DEVICE.

34. NOTIFY UNDERGROUND SERVICE ALERT AT 811 AT LEAST 48 HOURS PRIOR TO ANY EXCAVATION.

35. AT LEAST 10 DAYS PRIOR TO COMPLETION OF CONSTRUCTION, PROVIDE THE OWNER WITH A MAINTENANCE MANUAL. DATA SHALL BE ON 8 1/2" X 11" SHEETS, IN A 3-RING BINDER AND SHALL INCLUDE:
- INDEX SHEET WITH CONTRACTOR'S CONTACT INFORMATION AND LIST OF EQUIPMENT WITH LOCAL MANUFACTURER'S REPRESENTATIVES.
- CATALOG AND PARTS SHEET OF ALL MATERIAL AND EQUIPMENT.
- COMPLETE OPERATING AND MAINTENANCE INSTRUCTIONS FOR ALL EQUIPMENT.
- COMPLETE AND DATED MANUFACTURER'S WARRANTIES.

36. AT COMPLETION OF MAINTENANCE PERIOD, PROVIDE OWNER WITH THREE (3) EACH OF ALL OPERATING AND SERVICING KEYS AND WRENCHES REQUIRED FOR COMPLETE MAINTENANCE AND OPERATION OF ALL HEADS AND VALVES. PROVIDE TWO (2) EACH OF KEYS AND HOSE SWIVELS FOR QUICK COUPLERS AND KEYS TO CONTROLLER CABINETS AND/OR ENCLOSURES.

37. A DIAGRAM OF THE IRRIGATION PLAN SHOWING HYDROZONES SHALL BE KEPT WITH THE IRRIGATION CONTROLLER FOR SUBSEQUENT MANAGEMENT PURPOSES.

38. A CERTIFICATE OF COMPLETION SHALL BE FILLED OUT AND CERTIFIED BY EITHER THE DESIGNER OF THE LANDSCAPE PLANS, IRRIGATION PLANS, OR THE LICENSED LANDSCAPE CONTRACTOR FOR THE PROJECT.

39. AN IRRIGATION AUDIT REPORT SHALL BE COMPLETED AT THE TIME OF FINAL INSPECTION.

I HAVE COMPLIED WITH THE CRITERIA OF THE ORDINANCE AND APPLIED THEM ACCORDINGLY FOR THE EFFICIENT USE OF WATER IN THE IRRIGATION DESIGN PLAN.

DRIPLINE NOTES

1. PLANS ARE DIAGRAMMATIC. INSTALL DRIPLINE AND COMPONENTS PER MANUFACTURERS INSTRUCTIONS AND INSTALLATION DETAILS.

2. INSTALL DRIPLINE A MAXIMUM OF 18" APART (12" IN BIORETENTION/TURF AREAS) WITH EMITTERS TRIANGULARLY SPACED. INSTALL 2" FROM PERIMETER OF PLANTED AREA. THERE SHOULD BE A MINIMUM OF TWO DRIPLINE LATERALS IN EACH PLANTED AREA. DRIPLINE SHALL BE INSTALLED AT A CONSISTANT DEPTH THROUGHOUT THE CIRCUIT.

3. PLACE AIR/VACUUM RELIEF VALVES AT THE HIGHEST POINTS OF EACH ZONE AND JUST BELOW CHECK VALVES ON SLOPES. INSTALL ONE AIR/VACUUM RELIEF VALVE FOR EVERY 1125' OF TOTAL DRIPLINE PER ZONE.

4. PLACE FLUSH VALVES AT THE HYDRAULIC CENTER OF THE EXHAUST HEADER OR AT LOW POINT ON SLOPES. INSTALL MINIMUM OF ONE FOR EVERY 15 GPM.

5. INSTALL IN-LINE CHECK VALVES ON SLOPES GREATER THAN 3% AND WHERE LOW-LINE DRAINAGE COULD CAUSE WET AREAS IN THE LOWEST AREAS OF AN IRRIGATION ZONE. CHECK VALVES SHALL BE PLACED EVERY 4-5 FEET BETWEEN DRIPLINE LATERALS AND BEFORE THE FLUSH VALVE.

6. ON ALL SLOPES AND MOUNDS, PLACE THE DRIPLINE LATERALS PARALLEL TO THE SLOPE CONTOUR WHERE POSSIBLE. INCREASE THE LATERAL SPACING BY 25% ON THE LOWER ONE-THIRD OF THE SLOPE TO AVOID EXCESS DRAINAGE.

7. PVC SUPPLY AND FLUSH LINE SIZING GUIDE (ALL SUPPLY AND FLUSH LINES SHALL BE THE SAME SIZE FOR THE ENTIRE ZONE):
- 0-8 GPM – 3/4"
- 8.1-15 GPM – 1"
- 15.1-25 GPM – 1 1/4"

8. FITTINGS SHALL BE OF THE SAME MANUFACTURER AS DRIPLINE.

9. STAPLE DRIPLINE TO GROUND EVERY 3 FEET. USE ADDITIONAL STAPLES OVER EACH TEE, ELBOW OR CROSS. USE U-SHAPED STAPLES TO AVOID PINCHING THE DRIPLINE.

10. THOROUGHLY FLUSH EACH INSTALLATION SEGMENT TO ENSURE NO DEBRIS CONTAMINATION OCCURS.

11. RUN THE DRIPLINE SYSTEM EVERY DAY OR EVERY OTHER DAY TO ESTABLISH PLANT MATERIAL. MAINTAIN A CONSISTENT MOISTURE BALANCE IN THE SOIL. IT IS IMPORTANT TO KEEP THE SOIL MOIST WITHOUT SATURATION.

DRIP IRRIGATION NOTES

1. THE CONTRACTOR SHALL PROVIDE A DRIP EMITTER SYSTEM FOR ALL TREES, SHRUBS, AND GROUNDCOVER AS INDICATED ON THE IRRIGATION PLAN AND DETAILS.

2. EMITTERS ARE NOT SHOWN ON THE IRRIGATION PLAN. ACTUAL LAYOUT OF EMITTER SYSTEM SHALL BE DETERMINED BY THE CONTRACTOR IN THE FIELD USING THE IRRIGATION PLAN AND THE DRIP IRRIGATION DETAILS AS A GUIDE, WHILE USING THE PLANTING PLAN FOR THE LOCATION AND QUANTITIES OF EMITTERS.

3. EACH 15 GALLON SHRUB SHALL RECEIVE THREE 1 GPH EMITTERS DISTRIBUTED EVENLY AROUND SHRUB (TWO SHALL BE ON UPHILL SIDE OF SHRUB), VIA DISTRIBUTION TUBING. REFER TO THE PLANTING PLAN FOR THE LOCATION AND QUANTITY OF SHRUBS.

4. EACH 5 GALLON SHRUB SHALL RECEIVE TWO 1 GPH EMITTERS ON OPPOSITE SIDES AND UPHILL OF SHRUB, VIA DISTRIBUTION TUBING. REFER TO THE PLANTING PLAN FOR THE LOCATION AND QUANTITY OF SHRUBS.

5. EACH 1 GALLON SHRUB SHALL RECEIVE TWO 1/2 GPH EMITTERS ON OPPOSITE SIDES AND UPHILL OF SHRUB, VIA DISTRIBUTION TUBING. REFER TO THE PLANTING PLAN FOR THE LOCATION AND QUANTITY OF SHRUBS.

6. INSTALL THE EMITTERS ON TOP OF THE ROOT BALL AND AS FAR FROM THE TRUNK OF THE PLANT AS POSSIBLE.

7. DISTRIBUTION TUBING SHALL BE A MAXIMUM OF 5' IN LENGTH FROM ½" TUBING TO EMITTER. EACH LENGTH OF 1/2" DRIP TUBING SHALL BE A MAXIMUM OF 25'.

8. INSTALL FLUSH VALVES AT THE END OF THE RIGID PVC AS SHOWN ON PLANS.

9. ALL PVC LATERAL PIPE TO DRIP TUBING SHALL BE 3/4" UNLESS OTHERWISE NOTED.

10. THE DRIP EMITTER SYSTEM LAYOUT SHALL BE APPROVED BY THE LANDSCAPE ARCHITECT PRIOR TO BEGINNING CONSTRUCTION AND AFTER PLANTING HAS BEEN COMPLETED.

NOTE:

A FINAL CITY INSPECTION SHALL BE PERFORMED. THE INSTALLATION CONTRACTOR SHALL ATTEND THIS INSPECTION AND MAKE A REQUIRED REPAIRS AND ADJUSTMENTS TO ARCHIVE APPROVAL AND COMPLETION FROM THE CITY. CONTACT YOUR BUILDING INSPECTOR PRIOR TO FINAL INSPECTION REGARDING WELO SIGN OFF.

BROOKWATER
IRRIGATION CONSULTANTS
480 ST. JOHN STREET, SUITE 220
PLEASANTON, CALIFORNIA 94566
TEL 925.855.0417 FAX 925.855.0357
E-MAIL JANET@BROOKWATER.COM

STAFF APPRVL		REVISIONS NO.	REVISION	DATE	R.C.E.	EXP. DATE	CITY ENG.	DATE

PUBLIC IMPROVEMENTS APPROVED FOR CONSTRUCTION
CITY OF SANTA ROSA

BY: _____
DAVID M. GUHIN R.C.E. 65663
CITY ENGINEER
CITY OF SANTA ROSA

DATE: _____

CITY OF SANTA ROSA FILE NO. 2020-0022

CLIENT:
CHAMBERLAIN GROUP
655 SKYWAY, SUITE 230
SAN CARLOS
CALIFORNIA
94070
(650)-595-5582

CALL 811 BEFORE YOU DIG
811
SAFE DIGGING PARTNER

LICENSED LANDSCAPE ARCHITECT
TERI R. ABED
No. 2422
STATE OF CALIFORNIA

VAN DORN ABED
LANDSCAPE ARCHITECTS, INC.
81 14TH ST. SAN FRANCISCO, CA
ZIP 94103 PH (415) 864-1921 FAX(415) 864-4796

COPYRIGHT © 2006 VAN DORN ABED LANDSCAPE ARCHITECTS, INC.
ALL DRAWINGS, WRITTEN MATERIAL, APPEARING HEREIN CONSTITUTE ORIGINAL WORK OF VAN DORN ABED LANDSCAPE ARCHITECTS & SHALL NOT BE REPRODUCED, CHANGED OR COPIED IN ANY FORM OR MANNER WITHOUT CONSENT OF THE LANDSCAPE ARCHITECT.

PROJECT MANAGER: MW
DRAWN BY: STAFF
CHECKED BY: ZA

PROJECT NAME/LOCATION:
THE ARBORS
SANTA ROSA CA.

DRAWING TITLE:
LANDSCAPE CONSTRUCTION DRAWINGS

REVISIONS: NO. | DESCRIPTION: | BY: | DATE

SHEET TITLE:
IRRIGATION NOTES

SCALE: N/A
ISSUE DATE: 08/14/20
PROJECT NO.: V0646
SHEET NO.: L4.7
52 of 59

NOTE: EVENLY COAT METAL FITTINGS EXPOSED TO SOIL AND CONCRETE WITH 3M SCOTCHRAP PIPE PRIMER AND THEN WRAP WITH 3M SCOTCHRAP NO. 51 BLACK TAPE (3/4" OVERLAP). USE DIELECTRIC FITTINGS WHERE DISSIMILAR METALS COME INTO CONTACT.

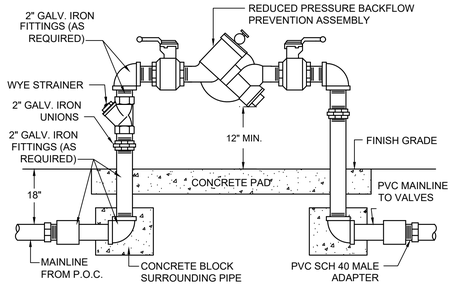

1 REDUCED PRESSURE BACKFLOW ASSEMBLY

NOT TO SCALE

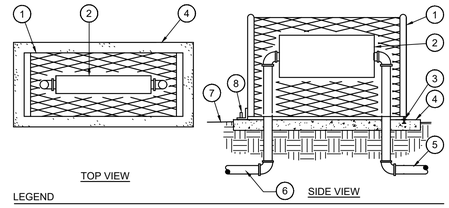

LEGEND

1. METAL BACKFLOW ENCLOSURE.
2. BACKFLOW PREVENTER.
3. HOLD DOWN ASSEMBLY (TYPICAL).
4. POURED CONCRETE BASE. - 6" MINIMUM THICKNESS - EXTEND 4" BEYOND OUTSIDE DIMENSIONS OF ENCLOSURE.
5. MAINLINE TO VALVES.
6. MAINLINE FROM POINT OF CONNECTION OR WATER METER.
7. FINISH GRADE.
8. SUPPORT ROD (TYPICAL).

2 U-SHAPE BACKFLOW ENCLOSURE

NOT TO SCALE

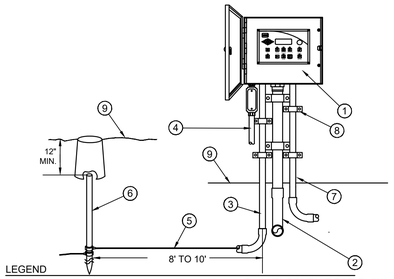

LEGEND

1. TWO-WIRE WALL MOUNT CONTROLLER
2. 2" CONDUIT FOR TWO WIRE DECODER CABLES.
3. 3/4" CONDUIT FOR GROUND.
4. 3/4" CONDUIT FOR INPUT POWER PER LOCAL AND NATIONAL ELECTRICAL CODES
5. COPPER CLAD GROUND WIRE
6. GROUNDING ROD IN VALVE BOX
7. 1/2" CONDUIT FOR FLOW SENSOR CABLE.
8. PIPE BRACKETS TO SECURE PIPE TO WALL.
9. FINISH GRADE.

3 TWO WIRE CONTROLLER - WALL MOUNT

NOT TO SCALE

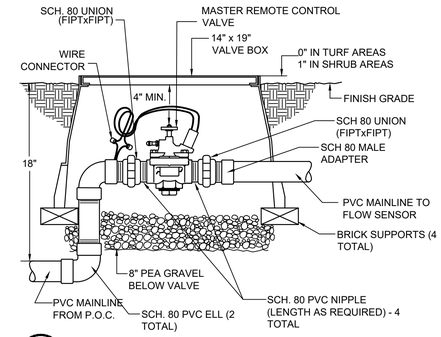

4 MASTER REMOTE CONTROL VALVE

NOT TO SCALE

NOTE: FLOW SENSOR MUST BE INSTALLED WITH INSERT (TOP) VERTICAL AND BODY (TEE) POSITIONED HORIZONTALLY.

#18 GAUGE DIRECT BURIAL SENSOR CABLE, PROVIDE 36" EXTRA CABLE. (MUST BE RUN IN CONDUIT FROM SENSOR TO CONTROLLER)

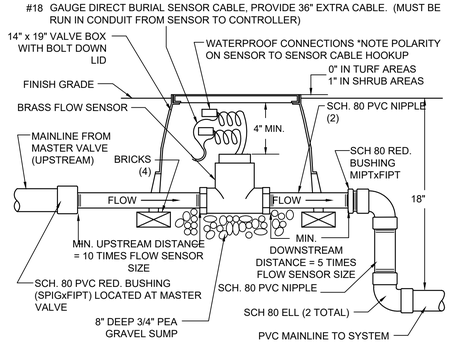

5 BRASS FLOW SENSOR INSTALLATION DETAIL

NOT TO SCALE

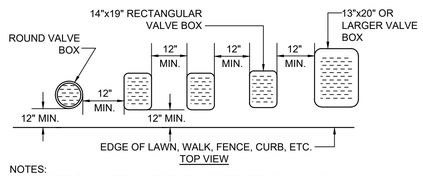

NOTES:

1. CENTER BOX OVER VALVE TO FACILITATE SERVICING VALVE.
2. SET BOXES 1" ABOVE FINISH GRADE OR MULCH COVER IN GROUND COVER/SHRUB AREA AND FLUSH WITH FINISH GRADE IN TURF AREA.
3. SET VALVE BOX ASSEMBLY IN GROUND COVER/SHRUB AREA WHERE POSSIBLE. INSTALL IN LAWN AREA ONLY IF GROUND COVER/SHRUB AREA DOES NOT EXIST ADJACENT TO LAWN.
4. SET BOXES PARALLEL TO EACH OTHER AND PERPENDICULAR TO EDGE.
5. AVOID HEAVILY COMPACTING SOIL AROUND VALVE BOX EDGES TO PREVENT COLLAPSE AND DEFORMATION OF VALVE BOX SIDES.
6. VALVE BOXES SHALL HAVE BOLT DOWN LIDS WITH BOLTS INSTALLED.
7. VALVE BOXES SHALL BE BY NDS, CARSON, OR EQUAL.

6 VALVE BOX INSTALLATION DETAIL

NOT TO SCALE

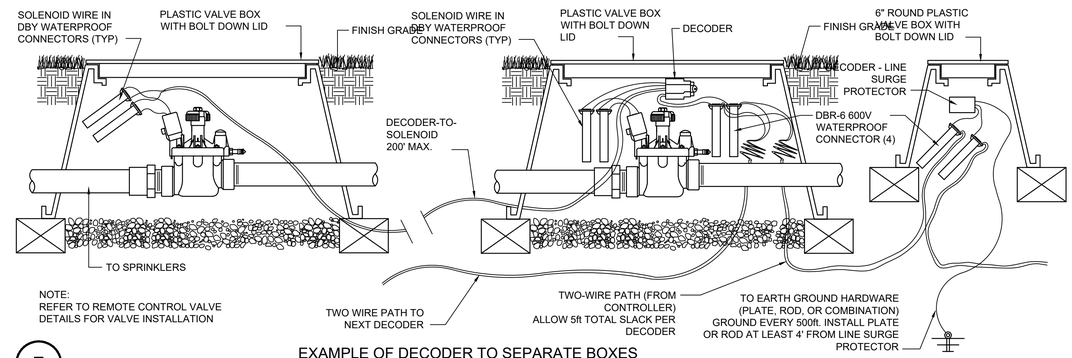

7 EXAMPLE OF DECODER TO SEPARATE BOXES

NOT TO SCALE

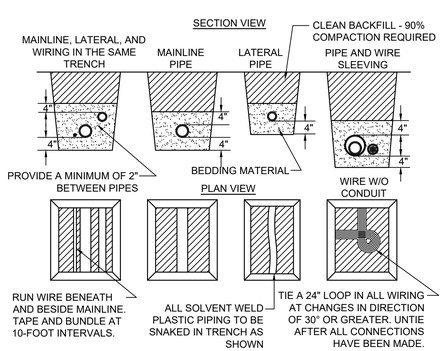

NOTES:

1. SLEEVE BELOW ALL HARDSCAPE ELEMENTS WITH SPECIFIED PVC PIPE TWICE THE DIAMETER OF THE PIPE OR WIRE BUNDLE WITHIN.
2. FOR PIPE AND WIRE BURIAL DEPTHS REFER TO IRRIGATION LEGEND AND SPECIFICATIONS.

8 PIPE AND WIRE TRENCHING

NOT TO SCALE

STEP 1: STRIP WIRES 1/2" FROM ENDS.

STEP 2: APPLY SCOTCHLOK Y SPRING CONNECTOR IN A CLOCKWISE DIRECTION.

STEP 3: INSERT SPLICE TO BOTTOM OF GEL-FILLED TUBE. CHECK TO MAKE SURE CONNECTOR HAS BEEN PUSHED PAST LOCKING FINGERS AND IS SEATED AT BOTTOM OF TUBE.

STEP 4: POSITION WIRES IN WIRE CHANNELS AND CLOSE INSULATOR TUBE COVER.

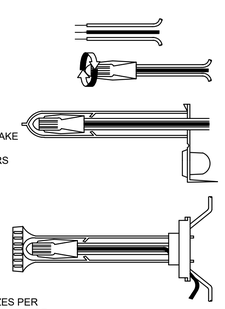

NOTE: MAXIMUM WIRE SIZES PER CONNECTOR ARE THREE # 14'S OR TWO #12'S.

9 WIRE CONNECTION DETAIL

NOT TO SCALE

BROOKWATER
IRRIGATION CONSULTANTS
480 ST. JOHN STREET, SUITE 220
PLEASANTON, CALIFORNIA 94566
TEL 925.855.0417 FAX 925.855.0357
E-MAIL JANET@BROOKWATER.COM

STAFF APPRVL		REVISIONS NO.	REVISION	DATE	R.C.E.	EXP. DATE	CITY ENG.	DATE

PUBLIC IMPROVEMENTS APPROVED FOR CONSTRUCTION

CITY OF SANTA ROSA

BY: _____

DAVID M. GUHIN R.C.E. 65663
CITY ENGINEER
CITY OF SANTA ROSA

DATE: _____

CITY OF SANTA ROSA FILE NO. 2020-0022

CLIENT:
CHAMBERLAIN GROUP
655 SKYWAY, SUITE 230
SAN CARLOS
CALIFORNIA
94070
(650)-595-5582

CALL 811 BEFORE YOU DIG — 811 — SAFE DIGGING PARTNER

LICENSED LANDSCAPE ARCHITECT — TERI R. ABED — STATE OF CALIFORNIA

VAN DORN ABED
LANDSCAPE ARCHITECTS, INC.
81 14TH ST. SAN FRANCISCO, CA
ZIP 94103 PH (415) 864-7921 FAX(415) 864-4796

COPYRIGHT © 2006 VAN DORN, ABED LANDSCAPE ARCHITECTS, INC.
ALL DRAWINGS, WRITTEN MATERIAL, APPEARING HEREON CONSTITUTE ORIGINAL WORK OF VAN DORN, ABED LANDSCAPE ARCHITECTS & SHALL NOT BE DUPLICATED, USED OR DISCLOSED WITHOUT WRITTEN CONSENT OF THE LANDSCAPE ARCHITECT.

PROJECT MANAGER: MW
DRAWN BY: STAFF
CHECKED BY: ZA

CA.

PROJECT NAME/LOCATION: THE ARBORS
SANTA ROSA

DRAWING TITLE: LANDSCAPE CONSTRUCTION DRAWINGS

REVISIONS: NO.	DESCRIPTION:	BY:	DATE

SHEET TITLE: IRRIGATION DETAILS

SCALE: N/A
ISSUE DATE: 08/14/20
PROJECT NO.: V0646
SHEET NO.: L4.8
53 of 59

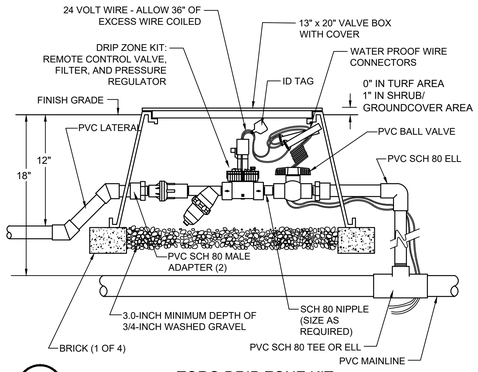

10 TORO DRIP ZONE KIT
NOT TO SCALE

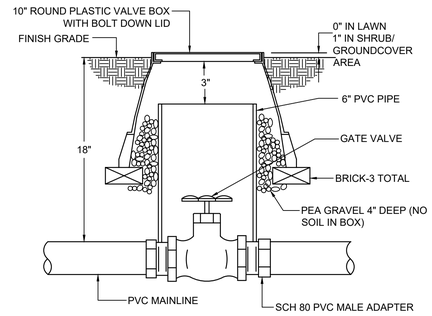

11 GATE VALVE DETAIL
NOT TO SCALE

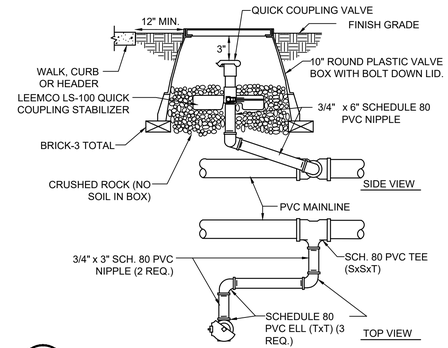

12 QUICK COUPLER IN BOX DETAIL
NOT TO SCALE

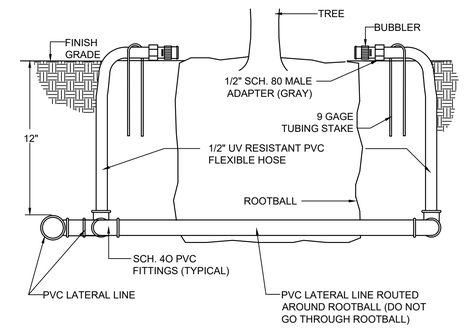

13 TREE BUBBLER DETAIL
NOT TO SCALE

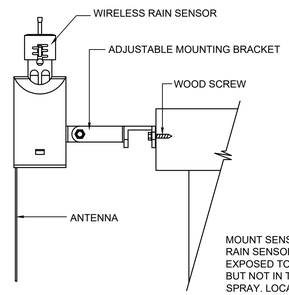

MOUNT SENSOR VERTICALLY. MOUNT RAIN SENSOR WHERE IT WILL BE EXPOSED TO UNOBSTRUCTED RAINFALL BUT NOT IN THE PATH OF SPRINKLER SPRAY. LOCATE WITHIN 300 FEET OF SENSOR RECEIVER AND CONTROLLER.

14 WIRELESS RAIN SENSOR INSTALLATION DETAIL
NOT TO SCALE

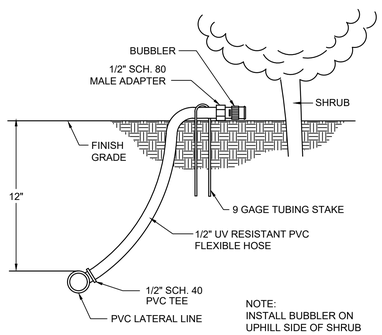

NOTE:
INSTALL BUBBLER ON UPHILL SIDE OF SHRUB

13 SHRUB BUBBLER ON FLEX HOSE DETAIL
NOT TO SCALE

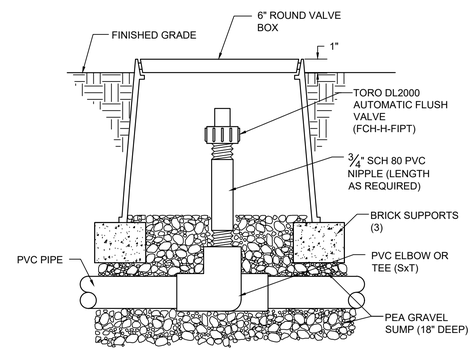

15 TORO DL2000 AUTOMATIC FLUSH VALVE - PLUMBED TO PVC
NOT TO SCALE

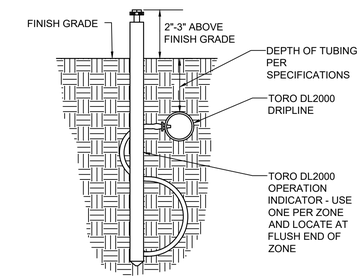

16 TORO DL2000 OPERATION INDICATOR
NOT TO SCALE

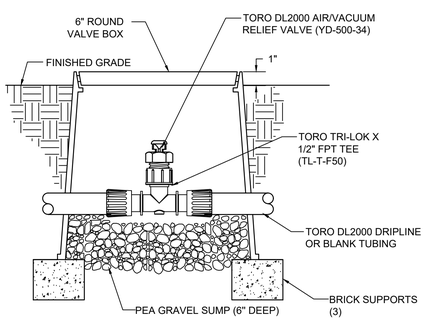

NOTE:
AIR/VACUUM RELIEF VALVE CANNOT BE CONNECTED LOWER THAN DRIPLINE LATERALS.

17 TORO DL2000 AIR/VACUUM RELIEF VALVE - PLUMBED TO TUBING
NOT TO SCALE

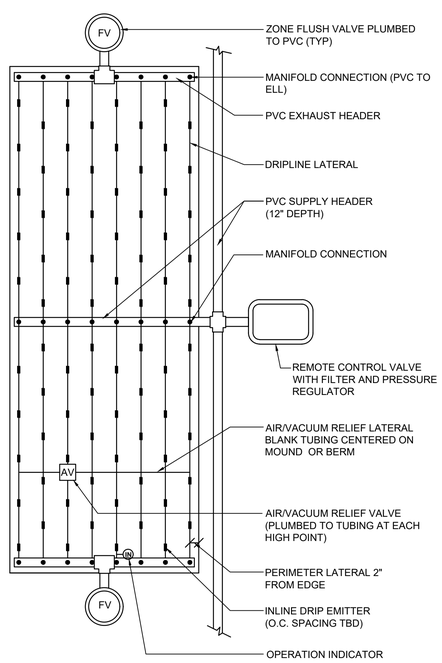

18 CENTER FEED INLINE DRIP LAYOUT
NOT TO SCALE

BROOKWATER
IRRIGATION CONSULTANTS
480 ST. JOHN STREET, SUITE 220
PLEASANTON, CALIFORNIA 94566
TEL 925.855.0417 FAX 925.855.0357
E-MAIL JANET@BROOKWATER.COM

STAFF APPRVL	NO.	REVISION	DATE	R.C.E.	EXP. DATE	CITY ENG.	DATE

REVISIONS

PUBLIC IMPROVEMENTS APPROVED FOR CONSTRUCTION
CITY OF SANTA ROSA

BY: _____
DAVID M. GUHIN R.C.E. 65663
CITY ENGINEER
CITY OF SANTA ROSA

DATE: _____

CITY OF SANTA ROSA FILE NO. 2020-0022

CLIENT:
CHAMBERLAIN GROUP
655 SKYWAY, SUITE 230
SAN CARLOS
CALIFORNIA
94070
(650)-595-5582

CALL 811 BEFORE YOU DIG
811
SAFE DIGGING PARTNER

LICENSED LANDSCAPE ARCHITECT
LEKI R. ABED
STATE OF CALIFORNIA

VAN DORN ABED
LANDSCAPE ARCHITECTS, INC.
81 14TH ST. SAN FRANCISCO, CA
ZIP 94103 PH (415) 864-7921 FAX(415) 864-4796

COPYRIGHT © 2006 VAN DORN ABED LANDSCAPE ARCHITECTS, INC.
ALL DRAWINGS, WRITTEN MATERIAL, APPEARING HEREIN CONSTITUTE ORIGINAL WORK OF VAN DORN ABED LANDSCAPE ARCHITECTS & SHALL NOT BE DUPLICATED, USED OR DISCLOSED WITHOUT WRITTEN CONSENT OF THE LANDSCAPE ARCHITECT.

PROJECT MANAGER: MW
DRAWN BY: STAFF
CHECKED BY: ZA

PROJECT NAME/LOCATION:
THE ARBORS
SANTA ROSA CA.

DRAWING TITLE:
LANDSCAPE CONSTRUCTION DRAWINGS

REVISIONS: NO.	DESCRIPTION	BY:	DATE

SHEET TITLE:
IRRIGATION DETAILS

SCALE: N/A
ISSUE DATE: 08/14/20
PROJECT NO.: V0646
SHEET NO.: L4.9
54 OF 59

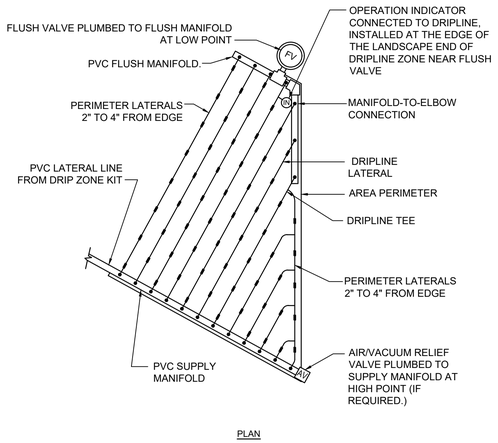

PLAN

19 TYPICAL ISLAND LAYOUT END FEED

NOT TO SCALE

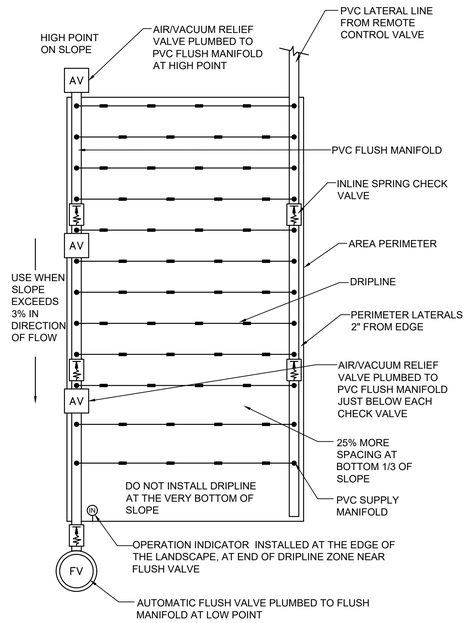

20 INLINE DRIP LAYOUT FOR SLOPES

NOT TO SCALE

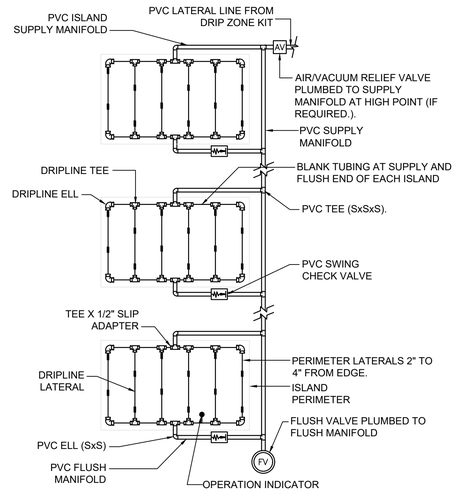

21 TYPICAL ISLAND LAYOUT

NOT TO SCALE

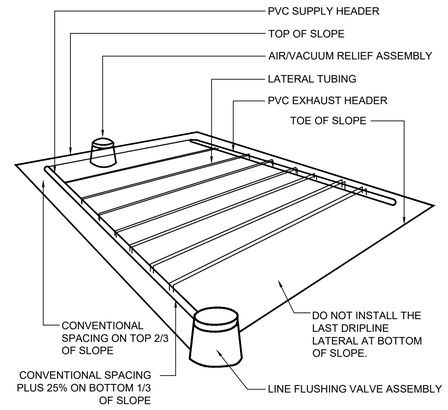

NOTE:
ALIGN DRIPLINE LATERALS PARALLEL TO THE CONTOURS OF THE SLOPE

22 INLINE DRIP SPACING LAYOUT ON SLOPE

NOT TO SCALE

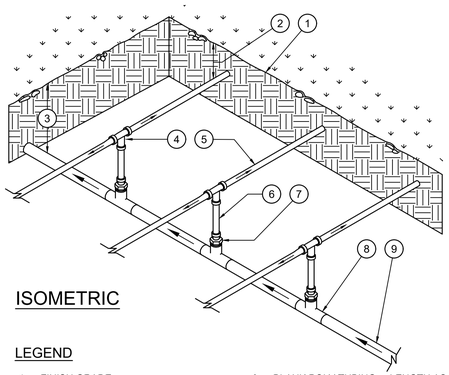

ISOMETRIC

LEGEND

1. FINISH GRADE.
2. DEPTH OF TUBING PER SPECIFICATIONS
3. DEPTH OF PVC SUPPLY MANIFOLD PER SPECIFICATIONS.
4. DRIPLINE TEE FITTING.
5. DRIPLINE LATERAL.
6. BLANK POLY TUBING, LENGTH AS NECESSARY.
7. DRIPLINE MPT ADAPTER.
8. PVC TEE (SxSxT) WITH 1/2" FPT OUTLET.
9. PVC SUPPLY MANIFOLD FROM REMOTE CONTROL VALVE ASSEMBLY.

23 CENTER FEED MANIFOLD

NOT TO SCALE

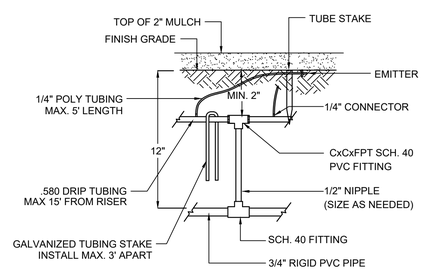

24 RISER TO DRIP TUBING DETAIL

NOT TO SCALE

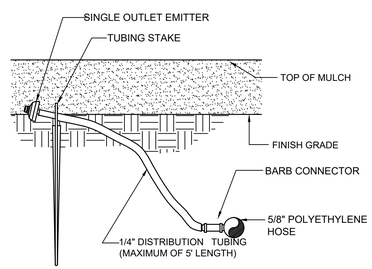

NOTE:
1. CONNECT 5/8" TUBE TO PVC LATERAL LINE USING COMPRESSION FITTINGS.
2. 5/8" HOSE SHALL NOT RUN LONGER THAN 20' FROM PVC LATERAL LINE.

25 SINGLE OUTLET EMITTER DETAIL

NOT TO SCALE

BROOKWATER
IRRIGATION CONSULTANTS
480 ST. JOHN STREET, SUITE 220
PLEASANTON, CALIFORNIA 94566
TEL 925.855.0417 FAX 925.855.0357
E-MAIL JANET@BROOKWATER.COM

STAFF APPRVL		REVISIONS NO.	REVISION	DATE	R.C.E.	EXP. DATE	CITY ENG.	DATE

PUBLIC IMPROVEMENTS APPROVED FOR CONSTRUCTION
CITY OF SANTA ROSA

BY: _____
DAVID M. GUHIN R.C.E. 65663
CITY ENGINEER
CITY OF SANTA ROSA

DATE: _____

CITY OF SANTA ROSA FILE NO. 2020-0022

CLIENT:
CHAMBERLAIN GROUP
655 SKYWAY, SUITE 230
SAN CARLOS
CALIFORNIA
94070
(650)-595-5582

CALL 811 BEFORE YOU DIG
811
SAFE DIGGING PARTNER

LICENSED LANDSCAPE ARCHITECT
TERI R. ABED
No. 2422
STATE OF CALIFORNIA

VAN DORN ABED
LANDSCAPE ARCHITECTS, INC.
81 14TH ST. SAN FRANCISCO, CA
ZIP 94103 PH (415) 864-7921 FAX(415) 864-4796

COPYRIGHT © 2006 VAN DORN ABED LANDSCAPE ARCHITECTS, INC.
ALL DRAWINGS, WRITTEN MATERIAL, APPEARING HEREIN CONSTITUTE ORIGINAL WORK OF VAN DORN ABED LANDSCAPE ARCHITECTS & SHALL NOT BE REPRODUCED, CHANGED OR COPIED IN ANY FORM OR MANNER WITHOUT PRIOR WRITTEN CONSENT OF THE LANDSCAPE ARCHITECT.

PROJECT MANAGER: MW
DRAWN BY: STAFF
CHECKED BY: ZA

PROJECT NAME/LOCATION:
THE ARBORS
SANTA ROSA CA.

DRAWING TITLE:
LANDSCAPE CONSTRUCTION DRAWINGS

REVISIONS: NO.	DESCRIPTION:	BY:	DATE

SHEET TITLE:
IRRIGATION DETAILS

SCALE: N/A
ISSUE DATE: 08/14/20
PROJECT NO.: V0646
SHEET NO.: L4.10
55 OF 59

THE ARBORS
WATER EFFICIENT LANDSCAPE WORKSHEET

Reference Evapotranspiration (Eto) 36.94

ZONE NO.	PLANT TYPE	HYDROZONE* (PLANT WATER USE)	PLANT FACTOR (PF)	IRRIGATION METHOD**	IRRIGATION EFFICIENCY (IE)	ETAF (PF/IE)	HYDROZONE AREA (HA) (Sq Ft)	ETAF x HA	ESTIMATED TOTAL WATER USE (ETWU)	% LANDSCAPE AREA
REGULAR LANDSCAPE AREA										
C-2	SHRUB	LW	0.30	DL	0.81	0.37	1,264	468	10,722	2.9%
C-3	BIORETENTION	LW	0.30	DL	0.81	0.37	198	73	1,680	0.5%
C-4	SHRUB	MW	0.50	B	0.81	0.62	107	66	1,513	0.2%
C-5	SHRUB	LW	0.30	D	0.81	0.37	2,297	851	19,484	5.3%
C-6	SHRUB	LW	0.30	DL	0.81	0.37	1,451	537	12,308	3.3%
C-7	TREE	LW	0.30	B	0.81	0.37	138	51	1,171	0.3%
C-8	TREE	MW	0.50	B	0.81	0.62	88	54	1,244	0.2%
C-9	SHRUB	LW	0.30	DL	0.81	0.37	1,796	665	15,235	4.1%
C-10	SHRUB	LW	0.30	DL	0.81	0.37	1,223	453	10,374	2.8%
C-11	SHRUB	LW	0.30	DL	0.81	0.37	238	88	2,019	0.5%
C-12	SHRUB	MW	0.50	B	0.81	0.62	141	87	1,993	0.3%
C-13	SHRUB	LW	0.30	B	0.81	0.37	126	47	1,069	0.3%
C-14	TREE	LW	0.30	B	0.81	0.37	38	14	322	0.1%
C-15	SHRUB	LW	0.30	DL	0.81	0.37	1,585	587	13,445	3.6%
C-16	SHRUB	MW	0.50	B	0.81	0.62	41	25	580	0.1%
C-17	SHRUB	LW	0.30	DL	0.81	0.37	254	94	2,155	0.6%
C-18	SHRUB	MW	0.50	B	0.81	0.62	85	52	1,202	0.2%
C-19	TREE	LW	0.30	B	0.81	0.37	38	14	322	0.1%
C-20	SHRUB	LW	0.30	B	0.81	0.37	94	35	797	0.2%
C-21	SHRUB	MW	0.50	B	0.81	0.62	72	44	1,018	0.2%
C-22	BIORETENTION	LW	0.30	DL	0.81	0.37	136	50	1,154	0.3%
C-23	SHRUB	LW	0.30	D	0.81	0.37	955	354	8,101	2.2%
C-24	TREE	LW	0.30	B	0.81	0.37	50	19	424	0.1%
C-25	SHRUB	MW	0.50	B	0.81	0.62	66	41	933	0.2%
C-26	SHRUB	LW	0.30	DL	0.81	0.37	1,879	696	15,939	4.3%
C-27	SHRUB	LW	0.30	DL	0.81	0.37	955	354	8,101	2.2%
C-28	BIORETENTION	LW	0.30	DL	0.81	0.37	193	71	1,637	0.4%
C-29	SHRUB	MW	0.50	B	0.81	0.62	53	33	749	0.1%
C-30	SHRUB	LW	0.30	DL	0.81	0.37	747	277	6,336	1.7%
C-31	TREE	LW	0.30	B	0.81	0.37	88	33	746	0.2%
C-32	SHRUB	MW	0.50	B	0.81	0.62	104	64	1,470	0.2%
C-33	TREE	MW	0.50	B	0.81	0.62	25	15	353	0.1%
C-34	SHRUB	LW	0.30	DL	0.81	0.37	729	270	6,184	1.7%
C-35	SHRUB	MW	0.50	B	0.81	0.62	75	46	1,060	0.2%
C-36	TREE	MW	0.50	B	0.81	0.62	13	8	184	0.0%
C-37	TREE	LW	0.30	B	0.81	0.37	163	60	1,383	0.4%
C-38	SHRUB	LW	0.30	D	0.81	0.37	1,020	378	8,652	2.3%
C-39	SHRUB	MW	0.50	B	0.81	0.62	167	103	2,361	0.4%
C-40	SHRUB	LW	0.30	B	0.81	0.37	91	34	772	0.2%
C-41	BIORETENTION	LW	0.30	DL	0.81	0.37	97	36	823	0.2%
C-42	SHRUB	MW	0.50	B	0.81	0.62	107	66	1,513	0.2%
C-43	SHRUB	LW	0.30	D	0.81	0.37	1,125	417	9,543	2.6%
C-44	SHRUB	MW	0.50	B	0.81	0.62	41	25	580	0.1%
C-45	SHRUB	LW	0.30	DL	0.81	0.37	1,695	628	14,378	3.9%
C-46	BIORETENTION	LW	0.30	DL	0.81	0.37	57	21	484	0.1%
C-47	SHRUB	LW	0.30	D	0.81	0.37	185	69	1,569	0.4%
C-48	SHRUB	MW	0.50	B	0.81	0.62	94	58	1,329	0.2%
C-49	SHRUB	LW	0.30	D	0.81	0.37	408	151	3,461	0.9%
C-50	SHRUB	LW	0.30	DL	0.81	0.37	1,053	390	8,932	2.4%
C-51	SHRUB	MW	0.50	B	0.81	0.62	28	17	396	0.1%
C-52	TREE	LW	0.30	B	0.81	0.37	201	74	1,705	0.5%
C-53	SHRUB	LW	0.30	D	0.81	0.37	430	159	3,647	1.0%
C-54	TREE	LW	0.30	B	0.81	0.37	25	9	212	0.1%
C-55	BIORETENTION	LW	0.30	DL	0.81	0.37	150	56	1,272	0.3%
C-56	SHRUB	MW	0.50	B	0.81	0.62	82	51	1,159	0.2%
C-57	SHRUB	LW	0.30	B	0.81	0.37	163	60	1,383	0.4%
C-58	SHRUB	MW	0.50	B	0.81	0.62	75	46	1,060	0.2%
C-59	SHRUB	LW	0.30	B	0.81	0.37	126	47	1,069	0.3%
C-60	TREE	LW	0.30	B	0.81	0.37	75	28	636	0.2%
C-61	BIORETENTION	LW	0.30	DL	0.81	0.37	134	50	1,137	0.3%
C-62	BIORETENTION	LW	0.30	DL	0.81	0.37	74	27	628	0.2%
C-63	SHRUB	LW	0.30	DL	0.81	0.37	733	271	6,218	1.7%
C-64	SHRUB	MW	0.50	B	0.81	0.62	75	46	1,060	0.2%
C-65	SHRUB	LW	0.30	DL	0.81	0.37	1,681	623	14,259	3.8%
C-66	BIORETENTION	LW	0.30	DL	0.81	0.37	267	99	2,265	0.6%
C-67	SHRUB	LW	0.30	B	0.81	0.37	214	79	1,815	0.5%
C-68	TREE	LW	0.30	B	0.81	0.37	25	9	212	0.1%
C-69	SHRUB	MW	0.50	B	0.81	0.62	63	39	891	0.1%
C-70	SHRUB	LW	0.30	DL	0.81	0.37	1,265	469	10,730	2.9%
C-71	SHRUB	LW	0.30	DL	0.81	0.37	2,300	852	19,510	5.3%
C-72	TREE	MW	0.50	B	0.81	0.62	50	31	707	0.1%
C-73	BIORETENTION	LW	0.30	DL	0.81	0.37	263	97	2,231	0.6%
C-74	SHRUB	MW	0.50	B	0.81	0.62	267	165	3,775	0.6%
C-75	SHRUB	LW	0.30	DL	0.81	0.37	2,129	789	18,059	4.9%
C-76	BIORETENTION	LW	0.30	DL	0.81	0.37	163	60	1,383	0.4%
C-77	SHRUB	LW	0.30	D	0.81	0.37	1,280	474	10,858	2.9%
C-78	BIORETENTION	LW	0.30	DL	0.81	0.37	304	113	2,579	0.7%
C-79	SHRUB	LW	0.30	D	0.81	0.37	3,360	1,244	28,501	7.7%
C-80	SHRUB	LW	0.30	D	0.81	0.37	797	295	6,761	1.8%
C-81	BIORETENTION	LW	0.30	DL	0.81	0.37	257	95	2,180	0.6%
C-82	SHRUB	LW	0.30	D	0.81	0.37	1,452	538	12,317	3.3%
C-83	SHRUB	MW	0.50	B	0.81	0.62	6	4	85	0.0%
C-84	TREE	LW	0.30	B	0.81	0.37	25	9	212	0.1%
C-85	SHRUB	MW	0.50	B	0.81	0.62	35	22	495	0.1%
C-86	SHRUB	LW	0.30	D	0.81	0.37	1,275	472	10,815	2.9%
C-87	BIORETENTION	LW	0.30	DL	0.81	0.37	96	36	814	0.2%
C-88	SHRUB	MW	0.50	B	0.81	0.62	138	85	1,951	0.3%
TOTALS (REGULAR LANDSCAPE AREAS)							**43,728**	**16,714**	**382,788**	**100.0%**
SPECIAL LANDSCAPE AREA										
	0			0		1.00	0	0	0	0.0%
TOTALS (SPECIAL LANDSCAPE AREAS)							**0**	**0**	**0**	**0.0%**
TOTALS FOR ALL AREAS							***43,728***	***16,714***	***382,788***	***100%***

CITY OF
SANTA ROSA
LANDSCAPE WATER USE STATEMENT

PROJECT NAME: THE ARBORS
PROJECT ADDRESS:

PREPARED BY: JANET LUEHRS (CID, CLIA #43274)
BROOKWATER INC., IRRIGATION CONSULTANTS
480 SAINT JOHN STREET, SUITE 220
PLEASANTON, CA 94566
925-855-0417
925-855-0357 (FAX)
Janet@Brookwater.com (e-mail)

"I have complied with the criteria of the Water Efficient Landscape Ordinance and applied them accordingly for the efficient use of water in the irrigation design plan."

Signed: Janet Luehrs

PART ONE MAXIMUM APPLIED WATER ALLOWANCE (MAWA)

MAWA = ETo x .62 x [(ETAFx HA) + ((1-ETAF) x SLA)]

YEARLY Eto (including rain)	36.9
CONVERSION FACTOR	0.62
ETAF	0.55
TOTAL IRRIGATED LANDSCAPE AREA (HA)	43,728 SQUARE FEET
SPECIAL LANDSCAPE AREA (SLA)	0 SQUARE FEET
LANDSCAPE WATER ALLOWANCE	**550,822 GALLONS PER YEAR**
TOTAL ACRE FEET	1.69 ACRE FEET

PART TWO ESTIMATED TOTAL WATER USE (ETWU)

(AVERAGE *ETAF* AND *ETWU* FROM WATER EFFICIENT LANDSCAPE WORKSHEET)

AVERAGE ETAF FOR REGULAR LANDSCAPE AREAS (TOTAL ETAF x AREA / TOTAL AREA)	0.38
ETWU FOR REGULAR LANDSCAPE AREAS	**382,788 GALLONS PER YEAR**
SITE WIDE ETAF	0.38
ETWU FOR ALL LANDSCAPE AREAS	**382,788 GALLONS PER YEAR**
TOTAL ACRE FEET	1.17 ACRE FEET

HYDROZONE SUMMARY

*Hydrozone Description	Total Sq. Ft.	% of Landscape
Cool Season Turf (CST)	0	0.0%
Warm Season Turf (WST)	0	0.0%
High Water Use Plants (HW)	0	0.0%
Bioretention Plants (BR)	0	0.0%
Medium Water Use Plants (MW)	2,098	4.8%
Low Water Use Plants (LW)	41,630	95.2%
Very Low Water Use Plants (VLW)	0	0.0%
Water Feature	0	0.0%
Special Landscape Area (SLA)	0	0.0%
TOTAL	43,728	100.0%

**Irrigation Method	Total Sq. Ft.	% of Landscape
Rotor (FC-R, PC-R)	0	0.0%
Multi-Stream Rotator (MR)	0	0.0%
Spray (S)	0	0.0%
Bubbler (B)	3,778	8.6%
Drip (D)	14,584	33.4%
In-Line Drip (DL)	25,366	58.0%
Micro Spray (MS)	0	0.0%
Other (O)	0	0.0%

BROOKWATER
IRRIGATION CONSULTANTS
480 ST. JOHN STREET, SUITE 220
PLEASANTON, CALIFORNIA 94566
TEL 925.855.0417 FAX 925.855.0357
E-MAIL JANET@BROOKWATER.COM

STAFF APPRVL	NO.	REVISION	DATE	R.C.E.	EXP. DATE	CITY ENG.	DATE

REVISIONS

PUBLIC IMPROVEMENTS APPROVED FOR CONSTRUCTION
CITY OF SANTA ROSA

BY: _____
DAVID M. GUHIN R.C.E. 65663
CITY ENGINEER
CITY OF SANTA ROSA

DATE: _____

CITY OF SANTA ROSA FILE NO. 2020-0022

CLIENT:
CHAMBERLAIN GROUP
655 SKYWAY, SUITE 230
SAN CARLOS
CALIFORNIA
94070
(650)-595-5582

CALL 811 BEFORE YOU DIG
811
SAFE DIGGING PARTNER

LICENSED LANDSCAPE ARCHITECT
JENI R. ABED
STATE OF CALIFORNIA

VAN DORN ABED
LANDSCAPE ARCHITECTS, INC.
81 14TH ST. SAN FRANCISCO, CA
ZIP 94103 PH (415) 864-7921 FAX(415) 864-4796

COPYRIGHT © 2006 VAN DORN ABED LANDSCAPE ARCHITECTS, INC.
ALL DRAWINGS, WRITTEN MATERIAL, APPEARING HEREIN CONSTITUTE ORIGINAL WORK OF VAN DORN ABED LANDSCAPE ARCHITECTS & SHALL NOT BE REPRODUCED, CHANGED OR COPIED IN ANY FORM OR MANNER WITHOUT THE WRITTEN CONSENT OF THE LANDSCAPE ARCHITECT.

PROJECT MANAGER: MW
DRAWN BY: STAFF
CHECKED BY: ZA

PROJECT NAME/LOCATION:
THE ARBORS
SANTA ROSA, CA.

DRAWING TITLE:
LANDSCAPE CONSTRUCTION DRAWINGS

REVISIONS:

NO.	DESCRIPTION	BY:	DATE

SHEET TITLE:
IRRIGATION WORKSHEETS

SCALE: N/A
ISSUE DATE: 08/14/20
PROJECT NO.: V0646
SHEET NO.: L4.11

Maximum Applied Water Allowance

The following calculations will help you determine your site specific water budget and establish a planting mix that will allow you to meet your water budget. Your Estimated Total Water Use must be less than your Maximum Applied Water Allowance.

1.) Maximum Applied Water Allowance (MAWA) COMMERCIAL

MAWA = (ETo) (0.62)[(0.45x LA) + (0.55 x SLA)]

Where:
ETo = Annual Net Reference Evapotranspiration (inches)
0.45 = ET Adjustment Factor
LA = Landscaped Area (square feet)
0.62 = Conversion factor (to gallons per square foot)
SLA = Portion of the landscape area identified as Special Landscape Area (square feet)
0.55 = the additional ET adjustment factor for Special Landscape Area (1.0 - 0.45 = 0.55)

A.) Net Evapotranspiration Calculation

43.85 *(Annual ETo)*				
27.63 *(Annual Rainfall)*	x	.25	=	6.91 *(Effective Rainfall)*

Net Evapotranspiration Calculation = Annual ETo - Effective Rainfall = 36.94

B.) Adjusted Landscape Area Calculation

43728 *(Landscaped Area)*	x 0.45 *Adjustment Factor*	=	19677.6
0 *(Special Landscaped Area)*	x 0.55 *Adjustment Factor*	=	0
	Sum of Adjusted Landscape Area	=	19677.6

MAWA = 36.94 x 0.62 x 19677.6 = 450703 gallons

2.) Estimated Total Water Use (ETWU)

A.) Net Evapotranspiration Calculation

Net Evapotranspiration Calculation = Annual ETo - Effective Rainfall = 36.94

B.) Adjusted Landscape Area Calculation

0 *(Very low water use plant sqft)*	*x 0.1*	=	0
41630 *(Low water use plant sqft)*	x 0.3	=	12489
2098 *(Moderate water use plant sqft)*	x 0.6	=	1258.8
0 *(High water use plant sqft)*	x 1.0	=	0
	Sum of Adjusted Landscape Area	=	13,748

ETWU = 36.94 x 0.62 x 13,748 / 0.81 = 388746 gallons

Irrigation Efficiency Factor	
Square footage of landscape on drip	42524
Square footage of landscape on spray	0
Total square footage of landscape	42524
Adjusted Irrigation Efficiency Factor	0.81

BROOKWATER
IRRIGATION CONSULTANTS
480 ST. JOHN STREET, SUITE 220
PLEASANTON, CALIFORNIA 94566
TEL 925.855.0417 FAX 925.855.0357
E-MAIL JANET@BROOKWATER.COM

STAFF APPRVL		REVISIONS NO.	REVISION	DATE	R.C.E.	EXP. DATE	CITY ENG.	DATE

PUBLIC IMPROVEMENTS APPROVED FOR CONSTRUCTION
CITY OF SANTA ROSA

BY: _____
DAVID M. GUHIN R.C.E. 65663
CITY ENGINEER
CITY OF SANTA ROSA

DATE: _____

CITY OF SANTA ROSA FILE NO. 2020-0022

CLIENT:
CHAMBERLAIN GROUP
655 SKYWAY, SUITE 230
SAN CARLOS
CALIFORNIA
94070
(650)-595-5582

CALL 811 BEFORE YOU DIG
811
SAFE DIGGING PARTNER

LICENSED LANDSCAPE ARCHITECT
LEE R. ABED
STATE OF CALIFORNIA

VAN DORN ABED
LANDSCAPE ARCHITECTS, INC.
81 14TH ST. SAN FRANCISCO, CA
ZIP 94103 PH (415) 864-7921 FAX(415) 864-4796

COPYRIGHT © 2006 VAN DORN, ABED LANDSCAPE ARCHITECTS, INC.
ALL DRAWINGS, WRITTEN MATERIAL, APPEARING HEREIN CONSTITUTE ORIGINAL WORK OF VAN DORN, ABED LANDSCAPE ARCHITECTS & SHALL NOT BE REPRODUCED, CHANGED OR COPIED IN ANY FORM OR MANNER WITHOUT WRITTEN CONSENT OF THE LANDSCAPE ARCHITECT.

PROJECT MANAGER: MW
DRAWN BY: STAFF
CHECKED BY: ZA

PROJECT NAME/LOCATION: THE ARBORS
SANTA ROSA CA.
DRAWING TITLE: LANDSCAPE CONSTRUCTION DRAWINGS

REVISIONS: NO.	DESCRIPTION	BY:	DATE

SHEET TITLE: IRRIGATION WORKSHEETS
SCALE: N/A
ISSUE DATE: 08/14/20
PROJECT NO.: V0646
SHEET NO.: L4.12

GENERAL NOTES:

1. Contractor shall verify all existing site conditions prior to beginning construction. Notify Owner's Representative of any discrepancies.

2. The Contractor shall provide all materials, labor and equipment to complete all landscape work as shown on the plans and specifications.

3. If there is a conflict with the utilities and the planting, the Owner's Representative is to be responsible for spotting new plant locations prior to the planting process.

4. The Contractor shall be responsible for any damage to existing utilities, pavement or improvements. All repairs shall be made at no expense to the Owner.

5. The Contractor shall notify the Owner's Representative prior to beginning construction and shall keep the Owner's Representative informed of progress of work throughout landscape construction.

6. All work shall be installed in conformance with all applicable local codes and ordinances by experienced workmen and a licensed Contractor who shall obtain all necessary permits and pay all required fees.

7. Any requirement in the Plans and / or Notes and Specifications shall be considered binding. In case of discrepancies, the Owner's Representative shall be contacted immediately

8. There shall be regular site visits by the Owner's Representative/Landscape Architect throughout landscape construction. A site review to begin maintenance period, and final site review will be required.

9. Execute weekly cleaning of the site throughout the contract period to remove all waste materials, rubbish, plant containers, etc.

10. See Civil Engineer's improvement plans for all general grading information and notes.

11 All written dimensions supersede scaled distances. All dimensions are taken from back of curb, face of building, face of wall finish or face of fence.

12. Upon award of bid and prior to any construction, the Contractor shall perform the Percolation and Soils Testing as specified in the Planting Notes, if these tests have not already been performed. If drainage is found to be insufficient, or soils test results identify conditions requiring extraordinary or corrective measures, the Contractor shall immediately alert the Owner's Representative and Landscape Architect of any such problems, for corrective action and/or additional drainage treatment.

GRADING NOTES:

1. See General Notes and Civil Engineer's Grading Plans for additional information.

2. Rough grading and site drainage shall have been completed prior to Contractor's work. Verify all existing site conditions and report any discrepancies to Owner's Representative.

3. Contractor shall be responsible for finish grading. Verify positive drainage at a minimum 2% slope in landscape areas away from buildings and 1% on paved surfaces. Ground cover areas shall be 1" and lawn areas 1" below top of adjacent paving, headers, or curbs. No low spots which hold standing water will be permitted.

4. All salvageable, clean top soil from areas to be paved shall be stockpiled to be used as fill in planting areas

CONSTRUCTION NOTES:

1. Concrete work: Install concrete work as detailed. Layout of concrete work shall be as shown on construction plans and as specified below.

   A. Layout shall be approved by Owner's representative/Landscape Architect prior to concrete pour. Contact Owner's Representative two days in advance.

2. Paving Installation:

   A. Concrete Materials: For paving, concrete shall be a 5 sack mix producing concrete having a 28 day strength not less than 2500 psi. For walls concrete shall be 6 sack mix.

   B. Portland cement: Conforming to ASTM. C150, Type I or II. Total alkali content not to exceed 0.60%. Deliver cement and all materials in labeled, unopened containers.

   C. Form coatings: Standard product resin type sealer. Do not use form oil or any oil-bearing material.

   D. Concrete aggregates: Conform to ASTM C33. Maximum 3/4" size aggregate.

   E. Base course aggregates: Conform to ASTM C33. Maximum 3/4" size aggregate.

   F. Water: Clean and potable.

   G. Forms: Form material is Sub-contractor's option.

   H. Admixtures or finish retardants: For workability, where approved by Owner's representative, and admixture may be added in accordance with manufacturer's recommendations. Obtain approval of material prior to use.

   I. Expansion joint material: 3/8" thick pre-molded joint filler, conforming to ASTM D1751 or D1752.

   J. Reinforcing steel:

   K. Bars: Deformed, intermediate grade, conforming to ASTM A615, Grade 40 for sizes #5 and smaller.

   L. Tie wire: Annealed copper-bearing steel wire, minimum 16 gauge.

   M. Welded wire mesh: 6" x 6" x #10.

   N. Liquid curing compound as required: Thompson's approved standard product fugitive resin type, or equal conforming to ASTM C309, free of wax or oil, compatible with subsequently applied finishes or coverings, not deleterious to bond of cementitious materials to aggregate

   O. Patching mortar: One part Portland cement or equal (part white and part gray adjusted to match color of surrounding concrete) and 2-1/2 parts sand with the least water required to produce a workable mass. Rework this mortar until it is the stiffest consistency that will permit placing.

2. Concrete Installation:

   A. Construct the subgrade true to grade and detail as shown. Compact subgrade to 90% maximum density at optimum moisture content.

   B. Set forms with upper edges true to line and grade. Properly brace or tie together to maintain position and shape. Remove side forms not sooner than 12 hours after finishing has been completed. Form curves and straight sections for smooth and continuous lines. Secure Owner's representative's approval of subgrade compaction and moisture content and form alignment prior to pouring concrete.

   C. Embedded items: Do not place any concrete until all inserted items such as sleeves, anchor bolts, wood, nails, dowels, etc. are installed in their proper locations, secured against displacement, cleaned, inspected and approved. Furnish ties and supports necessary to keep embedded items in place when concrete is placed.

   D. Weather: Do not place concrete during rain unless approved measures are taken to prevent damage to concrete.

   E. Deposit concrete evenly, consolidate with mechanical vibrators, particularly at side forms and strike off to indicated elevations and contour.

   F. Concrete finishes shall be even surfaces of uniform texture and appearance, free of unsightly bulges, depressions and other imperfections and as follows:

      Medium broom finish: Broom with coarse bristled broom across width of flatwork to a uniformly roughened surface. Finished surface and edges shall be clean with uniform and reasonably straight lines. Submit Sample.

      Light broom finish: Broom with janitor's push broom type, with soft bristles, across width to a uniformly roughened surface. There shall be no deeply incised or obvious lines. Submit sample.

      Steel trowel finish: After floating, and no free water is evident and/or no cement sticks to the finger when touching slab, steel trowel until hard. All trowel marks eliminated. Final trowelling done when a ringing sound is produced as the trowel is moved over the surface.

      Rock salt finish: Float concrete to form an overall smooth finish, with no free water evident and/or no cement sticks to the finger when touching slab, then broadcast medium size particle rock salt evenly over surface. Tamp rock salt into concrete surface. After concrete has set, wash surface. Submit sample for approval.

      Non-seeded exposed / wash reveal aggregate: Place and tamp sufficiently to fill forms, level and trowel, but not so much as to raise excess fines. Aggregate shall be evenly dispersed. Time washing of finished surface. Brush and work with bristle brooms or steel brush to a uniform appearance with evenly exposed aggregate. The surface shall be clean with no concrete adhering to tops of aggregate. Pebbles shall be tight and secure.

      Exposed aggregate- top seeded pebbles: Float and trowel concrete to smooth overall surface. Pebbles shall be top-seeded densely to sufficiently cover entire surface of concrete and shall be trowelled into the pour. Wash work with bristle brooms or steel brush after concrete has acquired adequate set to exposed aggregate. The finished surface shall allow minimum concrete to show and shall be clean with no concrete adhering to tops of pebbles. Pebbles shall be tight and secure.

      Acid Etch Finish: Apply Dayton Superior Topcast Surface Retarder '03 Violet' per manufacturer specifications to achieve an acid etch finish appearance. Test mix on a 2'x2' sample slab of concrete with integral color for site review prior to commencing with entire area. Follow procedure until the surface matches the approved sample slab. Care must be taken to ensure that run-off waters are treated in accordance with local by-laws and regulations. follow all manufacturer's instructions for use, storage, and clean up.

      Joints: Joints shall be tooled with one-quarter inch (1/4") radius edging tool or as shown on plans.

      Edges: Edge slabs one-half (1/2") inch radius, edge curbs and other structures three-quarters inch (3/4") radius unless otherwise shown.

      Remove flange marks: Remove flange marks resulting from tooling of edges by carefully trowelling out, unless specifically detailed in plans.

   G. Concrete stepping pads: Precast or formed in place as detailed. Set 1" above finish grade maximum.

4. Stucco on masonry and concrete

   Materials

   A. Finish coat shall be California Stucco Product Company, exterior dash color as noted on plans. Mix as per manufacturer's recommendation.

   B. Portland cement shall conform to Fed. Spec. No SS-C-192D

   C. Lime hydrate shall conform to Fed. Spec. No SS-L-351

   D. Sand used for grout and brown coat shall meet ASTM C-88-37T.

   E. Grout coat shall be mixed with 1 volume of Portland cement and 1 volume of sand and sufficient water to produce a mortar that will pour freely.

   F. Browning coat shall be mixed with a power mixer for at least 5 minutes with only sufficient water to produce plastic mortar. The mortar shall consist of 1 volume Portland cement, 1/10 volume hydrated lime to 1 volume cement, and 3 1/2 volumes of sand.

5. Application

   A. Surface preparation: Surface must be free of oil, grease or other foreign materials and sufficiently rough to insure bond. Hose off surface to remove all dust and dirt and to provide moisture to set grout coat.

   B. Apply grout court to surface to a thickness of 1/4" with dash brush in a heavy rough coat, or use plastering machine. In warm weather evenly dampen with water to prevent too rapid drying. Allow grout coat to set thoroughly prior to applying brown coat.

   C. Brown coat: Dampen grout coat prior to brown coat application. Apply brown coat to a minimum thickness of 3/8" and rodded straight and true in all directions.. This coat shall be applied without showing laps or joining. Brown coat shall be wet down for two days after application and permitted to cure and dry for a minimum of seven days.

   D. vi. Finish coat: Dampen brown coat evenly with water prior to application of finish coat. Dash shall be applied with a dash brush in a uniform even texture in two coats. Second coat to be applied as soon as first coat will support additional dash without sagging or running. The dash coat shall be applied without showing joining and laps. In warm weather, the day after application, this coat shall be fog spayed lightly, but not saturated, and continued until cured.

   E. Install joints as needed to prevent cracking per industry standards.

6. Carpentry:

   A. Wood materials: See details for type of wood for each item.

      i. Douglas fir: Graded Select Structural No. 1 - Exposed and shall be selected for straightness and for smoothness, sized as shown in details. Pressure treated with preservative for all members in touch with soil.

      ii. Redwood and Cedar : Selected for straightness and smoothness, size and grade as shown in plans.

      Coat all Redwood and cedar with two coats Penofin Clear Stain or Thompsons Waterseal or Eq waterproofing for all above surface areas. For below grade and embedded wood, treat all Redwood/Cedar members which touch the soil with two coats brush-on preservative treatment such as Rustolem Brand WoodLife CopperCoat or similar as prescribed by the American Wood Preservers Association standards.

   B. Workmanship: Carefully plan and layout the work as required. Properly accommodate the work of other trades. Accurately saw-cut and fit lumber into the respective locations, true to line, grade, and level, as indicated or required, and permanently secure in proper position with spikes, nails, lag screws, bolts, hangers, or other fastenings to make the work substantial and rigid in all parts and connections.

   C. Connections: Make connections between members tight, accurate and secure. Place fastenings without splitting wood; predrill when required. Drill bolt holes same size as bolt diameter. Drill holes for lag screws same size as thread root diameter; and counterbore, same depth and diameter as shank. Turn lag screws into place; do not drive. Provide bolts and lag screws with washers under every head and nut bearing on wood. Tighten bolts and lag screws at installation: carefully retighten just prior to closing in, or at completion of project.

   D. Finishing: As per plan.

   E. Redwood header layout: All curved sections shall be smooth and continuous. Layout shall be approved by Owner's representative.

7. Hardware:

   A. All metal bolts, nails, screws and other hardware shall be galvanized steel, sized as shown on the plans.

   B. All visible hardware shall be painted with two coats of black rustproof paint or to match architectural colors. Color to be approved by Owner's representative.

   C. All hardware for metal gates to be approved by Owner's representative.

8. Metal:

   A. Provide complete shop drawings for all metal fabrication.

   B. Brushed stainless steel handrails for pool: Fabricate as shown on drawings and as per shop drawings supplied by Pool Contractor.

   C. Metal fence: Fabricated for installation in configuration shown on plans. Posts shall be equally spaced in each straight section at approx. 6'-0" o.c. Verify dimensions in field.

   D. Fabricate all exterior steel work in shop, including all welding. All metal work shall conform to ASTM specifications. Miter corners and angles of moldings or frames unless otherwise noted.

   E. Deliver fence to site with all welded connections, burrs and rough surfaces ground smooth, cleaned and painted with shop prime coat (dry completely prior to delivery).

   F. Shop primer: One coat of primer, semi-quick drying.

      Painting: After material has been properly cleaned, apply shop prime coat of paint to all surfaces. Apply all paint in accordance with manufacturer's directions. Spot paint all abrasions and field connections after assembly.

   G. Installation: Set all work plumb, true, rigid and neatly trimmed out as detailed. Provide all necessary connections, anchor bolts etc. required to fit metal with other work.

      Protect all metal from damage to surface, profile or to shape from shop through construction to final acceptance of project.

      Paint fence and gates with two coats of rust-proof enamel. All exposed fastenings to match color and finish of fence and gates.

   H. Color: Color to be approved by Owner's representative, submit sample for approval.

   I. All defective work shall be repaired or replaced as directed Owner's representative.

   J. All exposed site metal for utilities, irrigation, etc. shall be painted with one coat brown rustproof paint.

STAFF APPRVL		REVISIONS NO.	REVISION	DATE	R.C.E.	EXP. DATE	CITY ENG.	DATE

PUBLIC IMPROVEMENTS APPROVED FOR CONSTRUCTION
CITY OF SANTA ROSA

BY: _____
DAVID M. GUHIN R.C.E. 65663
CITY ENGINEER
CITY OF SANTA ROSA

DATE: _____

CITY OF SANTA ROSA FILE NO. 2020-0022

CLIENT:
CHAMBERLAIN GROUP
655 SKYWAY, SUITE 230
SAN CARLOS
CALIFORNIA
94070
(650)-595-5582

CALL 811 BEFORE YOU DIG
811
SAFE DIGGING PARTNER

LICENSED LANDSCAPE ARCHITECT
JACK R. ABED
No. 3108
Exp. 1/22
STATE OF CALIFORNIA

VAN DORN ABED
LANDSCAPE ARCHITECTS, INC.
81 14TH ST. SAN FRANCISCO, CA
ZIP 94103 PH (415) 864-7921 FAX(415) 864-4796

COPYRIGHT © 2006 VAN DORN ABED LANDSCAPE ARCHITECTS, INC.
ALL DRAWINGS ARE THE PROPERTY OF THE LANDSCAPE ARCHITECTS, AND MUST BE RETURNED TO THE LANDSCAPE ARCHITECTS UPON REQUEST. NO REPRODUCTION OR DISTRIBUTION WITHOUT THE CONSENT OF THE LANDSCAPE ARCHITECT.

PROJECT MANAGER: MW
DRAWN BY: MW
CHECKED BY: ZA

PROJECT NAME/LOCATION:
THE ARBORS
SANTA ROSA CA.

DRAWING TITLE:
LANDSCAPE CONSTRUCTION DRAWINGS

REVISIONS:

NO.	DESCRIPTION	BY:	DATE

SHEET TITLE:
NOTES & SPECIFICATIONS

SCALE: N/A
ISSUE DATE: 08/14/20
PROJECT NO.: V0646
SHEET NO.: L5.0

PLANTING NOTES:

1. See General Notes.

2. Submittals: Contractor shall submit the following items to Owner's Representative and Landscape Architect for review/approval prior to beginning planting installation operations:
   A. Soils test reports per Notes 5.B (initial site soils test) & 5.E (post amendment installation test) below.
   B. Vendor data for landscape products, including: bark mulch, root barriers, fertilizers, soil amendments, and soil conditioners.
   C. Written results of percolation tests per Note 6.D below.

3. The Contractor shall verify the availability of all landscape plants within 10 days following award of the contract. Discrepancies or other problems and all plant substitutions shall be resolved at this time. If a substitute is authorized by the Owner's Representative, it must be of the same size, value and quality as the original plant.

4. All trees and representative samples of shrubs/ground covers shall be inspected at the site for approval by the Owner's Representative and meet the following standards:

   A. Quality and size shall conform to the State of California Grading Code of Nursery Stock, No. 1 grade and to the current issue of the American Standard for Nursery Stock published by the American Association of Nurserymen. Use only nursery-grown stock. The Owner's Representative will inspect plants for approval prior to any installation.

   B. Plant material must be selected from nurseries that have been inspected by state or federal agencies.

   C. Nomenclature will be in accordance with Hortus III.

   D. Plant materials will not be accepted that are overgrown, root-bound, or too recently canned so that the root system is not thoroughly established throughout the can. Pruning shall not be done prior to delivery except as authorized by the Owner's Representative.

5. Topsoil, Soil Amendments, Compost

   Per City of Santa Rosa:
   A. Soil Report 14-30.035:
      (A) In order to reduce runoff and encourage healthy plant growth, a soil analysis report shall be completed by the project applicant, or his/ her designee, as follows:
         (1) Submit soil samples to a laboratory for analysis and recommendations.
            (a) Soil sampling shall be conducted in accordance with laboratory protocol, including protocols regarding adequate sampling depth for the intended plants.
         (2) The soil analysis shall include:
            (a) Soil texture;
            (b) Infiltration rate determined by laboratory test or soil texture infiltration rate table;
            (c) pH;
            (d) Total soluble salts;
            (e) Sodium;
            (f) Percent organic matter; and
            (g) recommendations.
         (3) In projects with multiple landscape installations (i.e. production home developments) a soil sampling rate of 1 in 7 lots or approximately 15% will satisfy this requirement. Larger landscape projects shall sample at a rate equivalent to 1 in 7 lots.
         (4) The soil analysis report shall be made available, in a timely manner, to the professionals preparing the landscape design plans and irrigation design plans to make any necessary adjustments to the design plans.
         (5) If a grading permit is required, the soil analysis report shall be submitted to the City with the Certificate of Completion. If a grading permit is not required, the soil analysis report shall be submitted to the City with the Landscape Documentation Package.
         (6) The project applicant, or his/ her designee, shall submit documentation verifying implementation of soil analysis report recommendations to the City with Certificate of Completion."

   B. Soil Test: Contractor shall submit one (1) representative soil samples to Soil and Plant Laboratory, Santa Clara or approved equal to be tested for agricultural suitability and fertility with pre-plant and post-plant recommendations, immediately following the completion of rough grading. Soil samples shall be taken from location determined by the Owner's Representative. Soil shall be certified as clean and free of hazardous material or waste contamination. Notify Owner's Representative of any soils problems noted in the soils test report that could potentially affect/impact plant health, including but not limited to the following: high or low soil pH, poor soil drainage, excessive soil compaction, different soil types in the same test sample, deficient or excess nutrient levels, high salt levels, high boron or other elements and compounds toxic to plants, etc. Submit report to Landscape Architect and Owner's Representative for review and approval prior to beginning work. Do not proceed with any amending operations until soils report has been reviewed and approved. (See note for "Post Amendment Installation Soil Testing for Compliance" requirements - this soils test report for compliance must be submitted to Landscape Architect and Owner's Representative for review and approval prior to beginning planting operations).

   C. Compacted soils must be transformed to a "friable" condition to maximize water retention.

   D. Soil amendment to be added as follows in all planting areas:

      Amount per 1000 square feet:

      20 lbs. 6-20-20 fertilizer (Best's Cropmaker)

      10 lbs. 0-25-0 Single super phosphate

      10 lbs. Iron sulfate

      (Applied rates of soil amendment and commercial fertilizer shall be used for bidding purpose until determined by soil tests)

   E. Soil amendment in all planting areas shall be uniformly spread and thoroughly incorporated to a soil depth of 6" minimum by repeated rotary hoe cultivation prior to planting.
   F. Soil amendments must be incorporated according to recommendations of the soil analysis report and what is appropriate for the plants selected.

   G. Compost shall be applied at a minimum rate of four cubic yards per 1,000 sf of permeable area and incorporated to a depth of 6" into the soil. Soils with greater than 6% organic matter in the top 6" of soil are exempt from this requirement.

   H. Post Amendment Installation Soil Testing for Compliance: After incorporating amendments, fertilizers and conditioners, Contractor shall take one (1) representative soil samples and have samples tested for Agricultural Suitability and Fertility by an approved soils analysis laboratory for compliance with original soil test report recommendations. Add any additional amendments, fertilizers and conditioners recommended by soils analysis laboratory at no cost to Owner. Notify Owner's Representative of any potential soils problems noted in the report. Submit report for amendment/fertilizer/conditioner compliance to Landscape Architect and Owner's Representative prior to beginning planting operations.

6. Tree and Shrub Planting:

   Prior to digging holes for final planting, the Contractor shall spot all trees as shown on the Drawings for approval by the Landscape Architect.

   A. Soil amendments and fertilizer shall have been incorporated into the soil prior to tree and shrub planting.

   B. Dig pits as shown on Drawings.

   C. After pits are dug, break sides and bottom of holes to open wall of pit for root penetration.

   D. Percolation Test: All plant pits shall be tested for sufficient drainage prior to planting. Representative plant pits shall be dug (at least 2) at site upon award of Bid to test for general site subgrade drainage conditions. Individual planting pits shall also be tested again for sufficient drainage prior to planting. Contractor shall fill plant pits with water, to see if subsoil conditions will cause retention of water within plant pits overnight. If standing water is still observed after 12 hours, then Contractor shall alert Owner's Representative and Landscape Architect of the problem.

   E. Planting backfill mix for trees and shrubs shall be:
      Amount per Cubic Yard:

      3/4 cubic yard On site soil

      1.5 lbs. 6-20-20 fertilizer (Best's Cropmaker)

      2.5 lbs. 0-25-0 Single super phosphate

      1 lb. Iron sulfate

      (Applied rates of soil amendment and commercial fertilizer shall be used for bidding purpose until determined by soil tests)

   F. Fertilize plants at the time of planting with Agriform 21-gram fertilizer packets, 20-10-5: 2 per 1 gallon can; 3 per 5 gallon can; 8 per 15 gallon can; 15 per tree.

   G. Plants shall be erect after planting, and staked or guyed as detailed at the time of planting. Remove nursery stakes.

   H. Plant crown shall be 1" above finish grade for shrubs and 2" above finish grade for trees after watering and settling.

   I. Tree and shrub plantings shall be watered & flooded to eliminate air pockets within 2 hours of the time of planting.

   J. All vines shall be trained to posts, fences or walls by tying select individual branches with plastic covered wire ties as follows: ties shall be attached to wood surfaces with 3/4" galvanized iron staples and attached to stucco or masonry surfaces with epoxy as recommended by manufacturer. See planting details.

   K. All trees shall be planted 10'-0" minimum from buildings including overhangs and 5'-0" minimum from curbs, paving, fences, etc. Orient main branches of trees away from building. Should any discrepancies occur between field conditions and planting plans contact Owner's Representative. All trees closer than 5'-0" from curbs, foundations, sidewalks, or other hardscape items, shall be installed with linear root deflector panels protecting adjacent hardscape items, but never fully surrounding rootball. Install a 10 foot by 24 inch deep section of linear interlocking root deflector panels, centered on tree (5 feet on each side), located at curb, foundation, sidewalks, other hardscape items, unless otherwise indicated. See plans for detail.

   L. All trees shall be planted a minimum of 5'-0" away from storm drain, or other underground utility lines (or per code), and 10'-0" away from sanitary sewer lines (or per code), and 15'-0" minimum away from utility poles or light standards (or per code).

   M. A minimum 3" layer of mulch shall be applied on all exposed soil surfaces of planting areas except in turf applications. To provide habitat for beneficial insects and other wildlife, up to 5% of the landscape area may be left without mulch.

   N. All tree and shrub planting areas shall receive 3" deep mulch. Groundcover areas to receive 1" layer of mulch. Mulch shall be organic (unless prohibited by Fuel Modifications Plans, or other applicable ordinances) and shall consist of recycled or post-consumer materials.

   O. Mulch shall be "Premium Arbor Mulch" available through Lygnso, unless otherwise indicated. Mulch shall be natural brown in color (no die) and range in size to 1" maximum. Submit sample for approval. No substitutions without approval of Landscape Architect.

   P. All trees and shrubs planted in ground cover areas shall have watering basins around them. Basin diameters shall be the same size as the tree or shrub's rootball. Basins shall be formed with level bottoms and 3 inch high walls. Basins shall receive mulch unless otherwise indicated. Hold mulch 6" from trunk.

7. Ground Cover Planting:

   A. Soil amendments shall have been incorporated into the soil prior to planting.

   B. Clear planting areas of rocks and debris greater than 1" diameter.

   C. Apply a pre-emergent herbicide, per manufacturer's directions.

   D. All ground cover areas shall have complete coverage at spacings noted on plans.

   E. All planting areas with slopes greater then 2:1 shall have jute mesh installed as per detail, or per manufacturer recommendations.

   F. All groundcover areas shall receive 1" depth of mulch unless otherwise indicated. See bark mulch specification above.

   G. Thirty (30) days after planting, replace all dead plants and fill in bare ground cover areas. Top dress with 16-6-8 fertilizer at 7 lbs./1000 sq. ft. when ground cover is dry and thoroughly irrigate promptly after application

      (Applied rates of soil amendment and commercial fertilizer shall be used for bidding purpose until determined by soil tests)

10. Workmanship:
    Precautions shall be taken to avoid damage to existing plants, turf and structures. Any areas damaged shall be restored to their original condition.

11. Clean-up:
    Keep all areas of work clean, neat and orderly at all times. Keep all paved areas clean during planting and maintenance operations.

12. Site Visits and Approvals:
    The Contractor shall contact the Owner's Representative for review and approval of plant materials (see Note 4 above) and plant locations (see Note 6 above). The maintenance period begins following acceptance of plant installation.

13. Maintenance:
    A. Begin maintenance after each plant and each portion of lawn or ground cover is installed and continue until Final Acceptance.

    B. Maintenance Period shall begin upon inspection and approval by Owner's Representative and shall be for 60 calendar days.

    C. Maintenance of new planting shall consist of watering, cultivating, weeding, mulching, re-staking, tightening and repairing of guys, resetting plants to proper grades or upright position, restoration of the planting saucer, and furnishing and applying such sprays and invigorates as are necessary to keep the plantings free of insects and disease and in thriving condition.

    D. Maintenance of lawns shall consist of weeding, watering, mowing, treatment of fungus disease and insect pests, repair of erosion, fertilizing and all incidental work necessary to maintain turf satisfactory to the Owner. All areas sodded shall be mowed weekly beginning 14 days after sodding at a height no less than 2". All areas seeded shall be mowed only after lawn reaches 3" in height; lawn shall not be cut lower than 3" at its' first mowing. After first mowing, lawn shall be mowed weekly at a height no less than 2"

    E. Protect planting areas and plants at all times against damage of all kinds, including frost, for duration of maintenance period. Maintenance includes temporary protection fences, barriers, covers during frost and signs as required for protection. If any plants become damaged or injured, treat or replace as directed by Landscape Architect at no additional cost to Owner.

14. Guarantee:
    A. All trees and shrubs shall be in thriving condition 1 year from the date of final acceptance. Replace any trees which have lost at least 30% of their normal foliage or are not in vigorous growing condition.

IMPORT SOIL:

1. Works included:

   A. Provide imported topsoil as necessary in planting areas to raise existing soil to meet grade and in pots.

   B. Soils test imported top soil for landscape suitability.

   C. Provide and incorporate soil amendments and fertilizers per soils test recommendations.

2. IMPORT TOPSOILS TEST:

   A. Import topsoil: Contractor shall submit one soil sample for each batch of import topsoil to be delivered to the job site along with a copy of the specifications, type of plant material to be installed, and required water analysis to soil and plant laboratory, Santa Clara or approved equal, to be tested for agricultural suitability and fertility with pre-plant and post-plant recommendations and for conformance to the specifications. written test report shall include recommendations for soil amendment, fertilizers, chemical conditioners, application rates for soil preparation, planting backfill mix, and post-maintenance fertilization programs for the types of plantings specified. Soil shall be certified as clean and free of hazardous materials or waste contamination and shall be certified as meeting all topsoil specifications. Amend and fertilize soil per report recommendations.

   B. Import topsoil: After incorporating amendments and fertilizers to import topsoil areas as specified herein, Contractor shall submit one (1) soil sample to soil and plant laboratory, Santa Clara or approved equal to be tested for agricultural suitability and fertility for compliance to specifications. Soil sample shall be taken from location determined by the owner' representative. add any additional amendments recommended by soils analysis laboratory at no additional cost to owner' representative.

   C. Submit all soils tests to owner' representative for approval prior to placing topsoil. Any work performed prior to submittal of required soils testing and prior to written approval shall be rejected.

3. Import Topsoil Specifications:

   A. Provide new topsoil to the depth shown that is fertile, friable, USDA designated as a loamy sand, reasonably free of subsoil, clay lumps, brush, weeds and other litter, and free of roots, stumps, stones larger than 25.4mm (1 inch) in any dimension, and other extraneous or toxic matter harmful to plant growth.

   B. Obtain topsoil only from naturally, well-drained sites where topsoil occurs in a depth of not less than 101.6mm (4 inches). Do not obtain from bogs or marshes

   C. Conform to ASTM D 5268, pH range of saturated paste of 5.5 to 7.5 without high lime content.

   D. Soil to contain sufficient quantities of available nitrogen, phosphorus, potassium, calcium and magnesium to support normal plant growth. Sufficient quantities to be determined by required soils analysis and deficient nutrients or amendments to be added per report recommendations.

"I HAVE COMPLIED WITH THE CRITERIA OF THE ORDINANCE AND APPLIED THEM ACCORDINGLY FOR THE EFFICIENT USE OF WATER IN THE IRRIGATION DESIGN PLAN."

STAFF APPRVL		REVISIONS NO.	REVISION	DATE	R.C.E.	EXP. DATE	CITY ENG.	DATE

PUBLIC IMPROVEMENTS APPROVED FOR CONSTRUCTION
CITY OF SANTA ROSA

BY: _____
DAVID M. GUHIN R.C.E. 65663
CITY ENGINEER
CITY OF SANTA ROSA

DATE: _____

CITY OF SANTA ROSA FILE NO. 2020-0022

CLIENT:
CHAMBERLAIN GROUP
655 SKYWAY, SUITE 230
SAN CARLOS
CALIFORNIA
94070
(650)-595-5582

CALL 811 BEFORE YOU DIG
811
SAFE DIGGING PARTNER

LICENSED LANDSCAPE ARCHITECT
ZEKI R. ABED
Lic. No. 3108
Date 2/22
STATE OF CALIFORNIA

VAN DORN ABED
LANDSCAPE ARCHITECTS, INC.
81 14TH ST. SAN FRANCISCO, CA
ZIP 94103 PH (415) 864-7921 FAX(415) 864-4796

COPYRIGHT © 2006 VAN DORN ABED LANDSCAPE ARCHITECTS, INC.
ALL DRAWINGS ARE INSTRUMENTS OF SERVICE AND ARE THE PROPERTY OF VAN DORN ABED LANDSCAPE ARCHITECTS & SHALL NOT BE REPRODUCED, USED OR DISCLOSED WITHOUT WRITTEN CONSENT OF THE LANDSCAPE ARCHITECT.

PROJECT MANAGER: MW
DRAWN BY: MW
CHECKED BY: ZA

PROJECT NAME/LOCATION: THE ARBORS
SANTA ROSA CA.
DRAWING TITLE: LANDSCAPE CONSTRUCTION DRAWINGS

REVISIONS:

NO.	DESCRIPTION	BY:	DATE

SHEET TITLE: NOTES & SPECIFICATIONS

SCALE: N/A
ISSUE DATE: 08/14/20
PROJECT NO.: V0646
SHEET NO.: L5.1
59 OF 59