GOLDEN STATE
FIRE APPARATUS

PREPARED ESPECIALLY FOR:

CITY OF SANTA ROSA

Four (4) Pierce Manufacturing, Inc.
Enforcer Type 1 Engines

Pierce
Perform Like No Other

TABLE OF CONTENTS

1 Product Proposal

2 Standard Terms and Conditions (Exhibit A)

3 Product Specifications (Exhibit B)

- Specifications
- Electrical Analysis
- Turn Radius Report
- Weight Review Report
- Preliminary Drawing
- Certifications

4 Product Warranties (Exhibit C)

5 Dealer Supplied Products and/or Services (Exhibit D)

1 PRODUCT PROPOSAL

GOLDEN STATE
FIRE APPARATUS

goldenstatefire.com

PRODUCT PROPOSAL FOR:

City of Santa Rosa

2373 Circadian Way

Santa Rosa, CA 95407

Sales Consultant
Jon Bauer
jbauer@goldenstatefire.com
Mobile: (530) 351-2151

SUBMITTED DATE	EXPIRATION DATE	GSFA PROPOSAL #	MANUFACTURER BID #	MANUFACTURER	CONSORTIUM
2/12/26	3/13/26	50212-26	1103	Pierce Mfg.	HGAC Interlocal Contract #10-2428

Golden State Fire Apparatus, Inc. ("**GSFA**") is pleased to provide this proposal for the fire apparatus(es) and equipment identified below (the "**Product**") to **City of Santa Rosa** ("**Customer**") for consideration. This proposal (this "**Product Proposal**") includes the following exhibits attached hereto: the Standard Terms and Conditions attached as Exhibit A (the "**Terms and Conditions**"); the Product Specifications attached as Exhibit B (the "**Specifications**"); the Product Warranties attached as Exhibit C; and the Dealer Supplied Products and/or Services attached as Exhibit D (the "**Dealer Supplied Products/Services List**") (all of the foregoing, collectively, the "**Agreement**"). Through its signature below or other Acceptance (as defined on page 2), Customer acknowledges having received and read, and agrees to be bound by, the Agreement. The Agreement shall be effective as of the latest date appearing in the signature blocks below (the "**Executed Date**").

ITEM	PRODUCT DESCRIPTION	EXTENDED PRICE
A	Four (4) Pierce Enforcer Type 1 Engines	$5,282,762.24
B	*Discount HGAC Consortium Purchase - Pierce HGAC Contract #FS12-23/ ID# 23P - 105 - 1023*	*($42,100.00)*
C	*Discount For Multi-Unit Purchase*	*($62,142.24)*
D	Subtotal	$5,178,520.00
E	10.00% State Sales Tax	$517,852.00
F	California Tire Fee	$42.00
G	Third Party Surety 100% Performance Bond	$13,388.00
H	GRAND TOTAL PURCHASE PRICE	$5,709,802.00

PAYMENT TERMS – Customer shall pay the total purchase price set forth directly above (the "**Grand Total Purchase Price**") to GSFA no later than the time of GSFA's delivery of the applicable Product to Customer's address listed above (or Customer's pick up of such Product at GSFA's facilities, if approved by GSFA). GSFA shall have no obligation to deliver, or permit pick up of the Product if the Customer does not have full payment ready when the Product is complete and ready to deliver or pick up, as applicable. Customer shall pay any balance due as a result of Change Orders as described in the Terms and Conditions.

MANUFACTURER – Customer acknowledges that GSFA is not an agent of the Product manufacturer identified above ("**Manufacturer**") and is not capable of binding Manufacturer. Within five (5) business days of the Executed Date, GSFA shall submit an order form to the Manufacturer for the Product. GSFA's further performance under the Agreement is contingent upon Manufacturer's acceptance of such order form at the price and on the terms GSFA believed to be available when submitting this Product Proposal to Customer. If Manufacturer rejects such order as submitted or fails to respond to GSFA within a reasonable amount of time, GSFA shall notify Customer in writing, and unless GSFA and Customer otherwise agree in writing, the Agreement shall then terminate and have no further force or effect.

PRODUCT COMPLETION – The Product shall be ready for final inspection by Customer at the manufacturing facility within approximately **48 to 51 MONTHS** after the Executed Date. The foregoing estimate is provided as a good faith approximation as of the date of submission of this Product Proposal and is subject to the Terms and Conditions.

PREDELIVERY SERVICE – If applicable, after transportation from the manufacturing facility and prior to final delivery or pick up, the Product shall receive those additional Products and/or services identified on the Dealer Supplied Products/Services List. It is estimated that such service will add approximately **1 to 2 MONTH(S)** to the above Product completion estimate. The foregoing estimate is provided as a good faith approximation as of the date of submission of this Product Proposal and is subject to the Terms and Conditions.

PROPOSAL EXPIRATION – This Product Proposal supersedes any previous proposal(s) presented to Customer by GSFA and its employees and may be accepted by Customer on or before the Expiration Date identified above. Unless accepted by the Expiration Date, GSFA reserves the right to withdraw this Product Proposal or to alter its terms (including by providing updated Product pricing) prior to an order being accepted.

PURCHASE ORDER – Any PO shall be made out to: *Golden State Fire Apparatus, Inc. – 7400 Reese Road – Sacramento, CA 95828.*

ACCEPTANCE – ACCEPTANCE OF THIS PROPOSAL CREATES AN ENFORCEABLE BINDING AGREEMENT BETWEEN GSFA AND CUSTOMER. "**ACCEPTANCE**" MEANS THAT THE CUSTOMER DELIVERS TO GSFA: (A) A SIGNED COPY OF THIS PRODUCT PROPOSAL, OR (B) A SIGNED COPY OF A PURCHASE ORDER INCORPORATING THE AGREEMENT IN ITS ENTIRETY. ANY ADDITIONAL OR DIFFERENT TERMS, WHETHER CONTAINED IN CUSTOMER'S FORMS OR OTHERWISE PRESENTED BY CUSTOMER AT ANY TIME, ARE HEREBY REJECTED AND OF NO EFFECT UNLESS APPROVED IN WRITING SIGNED BY GSFA.

COUNTERPARTS - This Product Proposal may be executed in multiple counterparts, each of which shall be deemed an original (including copies sent to a party by electronic transmission) as against the party signing such counterpart, but which together shall constitute one and the same instrument. A signed copy of this Product Proposal delivered by facsimile, email or other means of electronic transmission will be deemed to have the same legal effect as delivery of an original signed copy of this Product Proposal. If this Product Proposal is returned to GSFA with the signature of Customer's authorized representative but without an attestation or co-signers signature, then absent Customer's written notice to the contrary, GSFA shall be entitled to rely on such single signature as sufficient evidence of the signatory's authority to execute the Agreement and bind Customer thereby.

INTENDING TO CREATE A BINDING AGREEMENT, Customer and GSFA have each caused this Product Proposal **dated 2/12/26, GSFA Proposal Number 50212-26** to be executed by their duly authorized representatives effective as of the Executed Date.

ACCEPTED AND AGREED TO BY CUSTOMER	ACCEPTED AND AGREED TO BY GSFA
_____	_____
Signature of Authorized Customer Representative	Signature of Authorized GSFA Representative
_____	_____
Print Name	Print Name
_____	_____
Title	Title
_____	_____
Date	Date

2 STANDARD TERMS AND CONDITIONS

Exhibit "A"

STANDARD TERMS AND CONDITIONS

1. Definitions.

a. "**Agreement**" has the meaning given in the Product Proposal.
b. "**Customer**" means the customer identified in the Product Proposal.
c. "**Dealer Preparation**," if applicable, means additional product(s) and/or services added or provided by GSFA after Manufacturer's completion of the Product and transportation to GSFA's premises prior to delivery to Customer, in accordance with the Dealer Supplied Products/Services List and/or a valid Change Order(s).
d. "**Dealer Supplied Products/Services List**" means the Dealer Supplied Products and/or Services List attached to the Product Proposal as Exhibit D, which reflects all Dealer Preparation under the Agreement absent a valid Change Order(s).
e. "**Grand Total Purchase Price**" means the total purchase price for the Product identified in the Product Proposal (subject to any adjustments required or permitted by these Terms and Conditions, including by the execution of a valid Change Order(s)).
f. "**GSFA**" means Golden State Fire Apparatus, Inc., a California corporation.
g. "**Manufacturer**" means the person or persons, company, firm, corporation, partnership, or other organization identified in the Product Proposal as responsible for manufacturing the Product.
h. "**Party**" or "**Parties**" means GSFA and/or Customer, as applicable.
i. "**Prepayment Discount**" means a discount to the purchase price for the Product granted to Customer in connection with Customer's advance payment of the Grand Total Purchase Price (or portion thereof, as specified in the Product Proposal), if applicable.
j. "**Product**" means the fire apparatus(es) and any associated equipment listed in the Product Proposal and further described in the Specifications.
k. "**Product Proposal**" means the GSFA proposal executed by Customer to which these Terms and Conditions are attached.
l. "**Product Warranties**" means the Manufacturer warranties for the Product attached to the Product Proposal as Exhibit C.
m. "**Specifications**" means the specifications for the Product attached to the Product Proposal as Exhibit B.
n. "**Terms and Conditions**" means these Standard Terms and Conditions, which are attached to the Product Proposal as Exhibit A.

2. Purchase and Payment.

a. Purchase. Customer agrees to purchase the Product at the Grand Total Purchase Price (as such amount may be adjusted in accordance with these Terms and Conditions), pursuant to the payment terms set forth in the Product Proposal. The Grand Total Purchase Price is payable in U.S. dollars.

b. Contingency Reserve Fund. The Grand Total Purchase Price may include an amount to be set aside for the purpose of funding any future costs or financial obligations incurred by Customer under the Product Proposal or any valid Change Order(s) (the "**Contingency Reserve Fund**"). If applicable, the amount of any required Contingency Reserve Fund will be set forth in either the Product Proposal or Exhibit D. The Contingency Reserve Fund may be withdrawn against by Customer or GSFA for the purpose of satisfying Customer's payment obligations under the initial Product Proposal or any valid Change Order(s) (including, without limitation, a Change Order submitted by GSFA pursuant to Section 8.b). If a Contingency Reserve Fund is required under the Agreement, the amount of such fund is not intended as an estimate of the actual additional costs of contingencies, Change Orders, unforeseen items or other required work that may be incurred under the Agreement after submission of the Product Proposal to Customer, which amounts Customer acknowledges may exceed the Contingency Reserve Fund amount. The balance of any Contingency Reserve Fund will be credited against Customer's payment obligations, or otherwise returned to Customer within thirty (30) calendar days of delivery of all Products under the Agreement (provided that Customer has paid all amounts owed under the Agreement as of such date).

c. Prepayment Discount. If GSFA has granted Customer a Prepayment Discount, Customer must provide each associated prepayment (each, a "**Prepayment**") within the time frame specified in the Product Proposal in order to receive such discount. Customer's failure to timely make any Prepayment may result in: (i) GSFA's termination of the Agreement; and/or (ii) Customer's loss of the Prepayment Discount for the portion of the Grand Total Purchase Price represented by such outstanding Prepayment and the application of a late fee as set forth in Section 6, in each case in GSFA's sole discretion.

d. State Sales Tax. Customer shall be responsible for the cost of state sales tax associated with, or attributable to, the Product. The taxes stated in the Product Proposal are subject to adjustment for the applicable state sales tax rate in effect at the time of delivery. Therefore, the sales tax set forth on the Product Proposal is only an estimate of such taxes and will be increased or decreased at the time of delivery if a change in the applicable sales tax rate has occurred, in which case Customer shall pay GSFA (or be refunded by GSFA) the difference in the applicable sales tax.

3. Product Completion Date. Within thirty (30) calendar days of the date on which the last required signatory executes the Product Proposal (such date, the "**Executed Date**"), GSFA shall submit to Customer a tentative Product completion date based on the then-estimated time to complete the manufacturing of the Product(s) and for the Product(s) to be ready for inspection and final approval by Customer at the manufacturing facility (which may differ from the Product completion estimate contained in the Product Proposal). Due to global supply chain constraints, any Product completion date contained herein, or in the Product Proposal, or otherwise provided to Customer, is a good faith estimate only as of the date provided to Customer, and merely an approximation based on current information available to GSFA and Manufacturer. Customer shall not be entitled to rely on any such estimate, and GSFA shall have no liability to Customer for a failure by GSFA or Manufacturer to meet any such estimate. All Product completion estimates are subject to modification and, if applicable, GSFA will provide updates to such estimates to Customer when available.

4. Stock / Demo Units. Notwithstanding any other provision contained in the Agreement (including Section 12 hereof concerning warranties), any Products constituting stock/demo unit(s) are sold to Customer on an as-is, first-come and first-served basis and GSFA makes no further representation or warranty to any customer with respect to such unit(s). Regardless of the terms of the Product Proposal, GSFA shall only be obligated to sell such stock/demo unit(s) to the first customer to enter into a purchase agreement with GSFA identifying such unit(s), and after the execution by GSFA of such agreement any subsequent purchase agreement (including the Agreement, as applicable) shall have no further force or effect with respect to such unit(s).

5. Multiple Unit Purchase. If the Grand Total Purchase Price includes pricing for multiple Products, the Product price stated in the Product Proposal shall only be valid if the quantity of Products being proposed are purchased at the same time, pursuant to the same Agreement. GSFA shall have no obligation to offer the same price for any Product if purchased by Customer pursuant to a later purchase agreement.

6. Late Fee; Storage Fee. A late fee equal to 0.033% of the outstanding portion of the Grand Total Purchase Price will be charged per calendar day for overdue payments beginning ten (10) calendar days after the payment is due and continuing for the first thirty (30) calendar days thereafter. After such thirty (30) calendar day period, the late fee shall increase to 0.044% per calendar day until payment of the outstanding portion of the Grand Total Purchase Price is received; provided that if Customer is a public agency, the foregoing late fees shall not exceed the statutory limit set forth in Section 926.10 of the California Government Code. If Customer is unable to satisfy the delivery requirements hereunder or is unwilling to take delivery of the Product, then GSFA shall be entitled to a storage charge running from the earlier of: (i) the date of delivery agreed to between GSFA and Customer (provided GSFA is willing and able to deliver the Product on such date), or (ii) twenty-one (21) calendar days after GSFA notifies Customer that the Product is available for delivery. The storage charge is equal to: (i) $175.00 per calendar day per apparatus stored, or (ii) the actual charges incurred by GSFA with a third party for storage of the Product, whichever is greater. Such storage charge shall continue until the actual time of delivery and Customer's possession of the Product, and any such storage by GSFA or such third party shall be at the sole risk of Customer.

7. Delivery; Inspection and Acceptance.

a. Delivery. Subject to Section 5 hereof, the Product is scheduled to be delivered to the location and within the time period specified in the Product Proposal. Such delivery date is an estimate, and GSFA is, notwithstanding this Section 7.a, not bound to such date unless it otherwise agrees in a separate writing to complete delivery by a date certain. For the avoidance of doubt, GSFA is not responsible for delivery delays caused by or because of actions, omissions or conduct of Customer, the Manufacturer, or their respective employees, affiliates, suppliers, contractors, and carriers. Risk of loss for the Product shall pass to Customer at the point and time of delivery (which shall include an attempted delivery by GSFA which cannot be completed due to any act or omission of Customer). However, title to the Product shall only pass to Customer upon delivery if Customer has then fully paid GSFA all amounts due hereunder (including additional amounts due under any valid Change Order). Absent GSFA's separate written agreement, which it may or may not provide in its sole and absolute discretion, delivery of the Product will not occur before Customer has fully paid all amounts due under the Agreement and provided proof of insurance reasonably satisfactory to GSFA. If GSFA permits Customer to take possession of the Product prior to such payment, Customer may not mount equipment, conduct training, or place the Product into service until all amounts due under the Agreement have been paid. If Customer has ordered multiple Products, GSFA reserves the right to deliver such Products in installments and to separately invoice Customer for such Products.

b. Inspection and Acceptance. Upon delivery, Customer shall have ten (10) calendar days within which to inspect the Product for substantial conformance to the Specifications, and in the event of substantial non-conformance to the Specifications to furnish GSFA with written notice sufficient to permit GSFA to evaluate such non-conformance ("**Notice of Nonconformance to Specifications**"). Contingent upon part availability and Customer's cooperation, any Product not in substantial conformance to material Specifications shall be remedied by GSFA (by repair or replacement, at GSFA's election) within thirty (30) calendar days from GSFA's receipt of the Notice of Nonconformance to Specifications. In the event GSFA does not receive a Notice of Nonconformance to Specifications within ten (10) calendar days of delivery, the Product will be deemed to be in conformance with Specifications and accepted by Customer.

8. Changes to Agreement Terms.

a. Change Orders. The Customer may request that GSFA incorporate a change to the Product or the Specifications for the Product, or GSFA may submit changes to the Agreement required or permitted to be made by GSFA (pursuant to Section 8.b or otherwise), by delivering a written Change Order to the other party hereto, which shall include a description of the proposed change sufficient to permit the receiving party to evaluate such change (either, a "**Change Order**"). For any Change Order submitted by Customer, GSFA will provide Customer a written response (a "**Response**") stating (i) whether GSFA will accommodate such Change Order (which GSFA may decide in its sole and absolute discretion); and (ii) the terms of the modification to the order, including any increase or decrease in the Grand Total Purchase Price resulting from such Change Order, a date on which any increase in the Grand Total Purchase Price must be paid, and an estimate of any effect on production scheduling or delivery resulting from such Change Order. Customer shall have seven (7) calendar days after receipt of the Response to notify GSFA as to whether Customer desires to make the changes GSFA has approved in the Response. In the event Customer countersigns GSFA's Response, Customer shall pay the increase (or be refunded the decrease) in the Grand Total Purchase Price by the date specified in the Response. GSFA may also send Customer a Change Order to account for any changes to the Agreement required or permitted to be made by GSFA (including those changes required pursuant to Section 8.b hereof), and such Change Order shall be effective upon delivery to Customer unless Customer elects to terminate the applicable Product order under the Agreement in accordance with Section 9.

b. Additional Changes.

i. Component Price Volatility; Increases Imposed by Manufacturer. GSFA shall not be responsible for (i) any unforeseen price increase or surcharge enacted by suppliers of major components of the Product (including but not limited to commercial chassis, engine, transmission, and fire pump); or (ii) price increases imposed on GSFA by Manufacturer pursuant to Manufacturer's terms and conditions for sale of the Product (a "**Manufacturer**

Price Increase"), after Customer becomes bound by the Agreement. Customer shall be responsible for all amounts arising from any price increases for major components of the Product (including all associated taxes and fees thereon) or any Manufacturer Price Increases occurring after the execution of the Agreement which increase the cost of the Product to GSFA, and such amounts will be documented on a Change Order adjusting the Grand Total Purchase Price accordingly. Customer shall pay any such price increase prior to Product delivery. A Manufacturer Price Increase may include, but shall not be limited to, an increase in Product price resulting from an increase in the Producer Price Index of Components for Manufacturing (see www.bls.gov Series ID: WPUID6112) in excess of a compounded annual growth rate of five percent (5%), as measured between the month Manufacturer accepts the applicable Product order and the month that is fourteen (14) months prior to the then-current estimated Product completion date (the foregoing, a "**PPI-Based Price Increase**"). If, upon Customer's receipt of a Change Order reflecting a PPI-Based Price Increase, Customer elects to terminate the applicable Product order in accordance with Section 8.b.iii rather than pay such increase, then in lieu of the cancellation fees described in Section 9.a hereof GSFA shall be entitled to recover and Customer shall pay GSFA's actual non-reimbursable costs incurred in connection with the Product order through the date of Customer's termination of such Product order.

ii. New Legal Standards. In the event the Product design, materials or specifications require an alteration arising from new regulations issued by any governmental entity or trade association, including, but not limited to, the NFPA, DOT, and EPA, and such alteration increases the cost of the Product to GSFA, Customer shall be responsible for changes to the Grand Total Purchase Price arising from such alteration. GSFA shall promptly notify Customer when it becomes aware of any potential or required change in regulations occurring prior to delivery that would impact the Product purchased.

iii. Change Orders. Customer shall execute any Change Order submitted by GSFA documenting any of the changes required or permitted by Sections 8.b.i and 8.b.ii above (which shall, to the extent practicable, itemize any increases in the Grand Total Purchase Price and specify a commercially reasonable date by which Customer must pay such increase), unless Customer instead elects to terminate the applicable Product order under the Agreement within fifteen (15) calendar days of Customer's receipt of such Change Order and in accordance with Section 9. Absent such a termination, failure or refusal to execute a Change Order does not alter Customer's obligations under this Section 8.b.

c. Changes in Commercial Specifications. Specifications for all components of the Product manufactured by companies other than the Manufacturer are subject to change without notice. Specifications for such components will be as available at the time of manufacture of the Product. GSFA shall not be liable for any deviations in such specifications arising from a substitution of components or changes in the design of any component by their original manufacturer.

9. Termination.

a. By Customer. Customer may terminate a Product order identified in the Product Proposal or a Change Order by providing written notice to GSFA in accordance with Section 16 hereof. If Customer elects to terminate a Product order, Customer shall pay GSFA a cancellation fee as follows: (a) after the Product order is accepted and entered by GSFA, 10% of the portion of the Grand Total Purchase Price applicable to such Product (including all associated taxes, fees and costs) (such amount, the "**Product Purchase Price**"); (b) after completion of the pre-construction phase of the order process, 20% of the Product Purchase Price; and (c) after the requisition of any materials or commencement of any manufacturing or assembly of the Product by either GSFA or Manufacturer but before substantial completion of such Product, 50% of the Product Purchase Price. Customer shall not be permitted to terminate a Product order after substantial completion of manufacturing and assembly of such Product (excluding any Dealer Preparation or other pre-delivery services or untypical Product customization, if applicable). Notwithstanding the foregoing, if the applicable tier of cancellation fee is not sufficient to cover all actual costs and fees incurred by GSFA with Manufacturer in connection with Customer's termination of the Product order ("**Manufacturer Termination Fees**"), then in addition to such cancellation fee Customer shall pay the balance of all Manufacturer Termination Fees. If Customer received a Prepayment Discount, such discount shall not be considered for the purpose of calculating the above cancellation fee. The tier of cancellation fee applicable to any cancellation,

as well as the determination of whether a Product has reached substantial completion, shall be in the sole and absolute discretion of GSFA. Customer may request a fee waiver, and GSFA, in its sole discretion, may agree to waive and/or adjust such fee. GSFA will return the balance of the Grand Total Purchase Price or Product Purchase Price, as applicable, within thirty (30) calendar days of the effective date of the cancellation of the Product order or termination of the Agreement.

Customer may terminate the Agreement for an Event of Default by GSFA after providing GSFA with written notice in accordance with Section 16 (which notice shall describe with reasonably particularity the Event of Default justifying such termination) if such Event of Default remains uncured (if capable of cure) thirty (30) days following GSFA's receipt of such notice; provided, however, that the foregoing cure period shall continue if and for so long as GSFA has commenced and is continuing to undertake commercially reasonable efforts to cure such Event of Default as promptly as reasonably practicable.

b. By GSFA. GSFA may terminate the Agreement for an Event of Default by Customer after providing Customer with written notice in accordance with Section 16 (which notice shall describe with reasonably particularity the Event of Default justifying such termination) if such Event of Default remains uncured (if capable of cure) thirty (30) days following Customer's receipt of such notice; provided, however, that the foregoing cure period shall continue if and for so long as Customer has commenced and is continuing to undertake commercially reasonable efforts to cure such Event of Default as promptly as reasonably practicable. Notwithstanding the foregoing, GSFA may terminate the Agreement effective immediately upon written notice to Customer for Customer's failure to pay any amount owed under the Agreement when due.

Notwithstanding any other provision of this Agreement, if Customer terminates a Product order in accordance with Section 9.a above, GSFA may elect to instead terminate the Agreement upon notice to Customer in accordance with Section 16 hereof. If GSFA terminates the Agreement in accordance with this Section 9.b, Customer shall pay the applicable tier of cancellation fee for all Products pursuant to Section 9.a above as if Customer had elected to terminate each applicable Product order.

c. Based on Discontinuation or Cancellation by Manufacturer. In the event that Manufacturer cancels a Product order (provided that such cancellation is not the result of an act by Customer in violation of the Agreement) or discontinues the manufacture of a Product prior to its completion and delivery: (i) if such Product is the only Product contemplated under the Agreement, then the Agreement shall terminate; or (ii) if additional Products are contemplated under the Agreement, then only the Product order for the applicable cancelled or discontinued Product shall be terminated. Such Agreement termination or Product termination, as applicable, shall be effective upon GSFA's written notice to Customer of such cancellation or discontinuance in accordance with Section 16 hereof. GSFA's only obligation to Customer in such event shall be the return of any Prepayment paid by Customer for the cancelled or discontinued Product. For the avoidance of doubt, the cancellation fees contemplated in Section 9.a hereof shall not apply in the event of a termination pursuant to this Section 9.c.

10. Customer's Obligations. Customer shall provide its timely and best efforts to cooperate with GSFA and Manufacturer during the Product manufacturing and Dealer Preparation process. Reasonable and timely cooperation includes, without limitation, Customer's providing timely information in response to any requests from Manufacturer or GSFA and the participation of Customer's authorized representatives in traveling to Manufacturer's facility for inspections and approval of the Product, including a final approval before the Product leaves Manufacturer's facility.

11. Representations and Warranties. Customer hereby represents and warrants to GSFA as of the Executed Date that the execution of the Agreement and the purchase of the Product(s) and performance of the other obligations of Customer under the Agreement have been approved by Customer in accordance with applicable general laws and, as applicable, Customer's charter, ordinances, purchasing policies, and other governing documents, and executed by the appropriate Customer employees, officials, and/or representatives, and funding for Customer's performance of its obligations under the Agreement has been duly budgeted and appropriated by Customer.

12. Standard Warranty. All applicable Manufacturer warranties are contained in the Product Warranties. Any additional warranties must be expressly approved in a writing signed by GSFA, and Customer acknowledges and agrees that Manufacturer will not be liable for any such additional warranties.

a. Disclaimer. OTHER THAN AS EXPRESSLY SET FORTH IN THE AGREEMENT, GSFA, ITS AFFILIATES, AND THEIR RESPECTIVE OFFICERS, DIRECTORS, EMPLOYEES, SHAREHOLDERS, AGENTS, OR REPRESENTATIVES, DO NOT MAKE ANY EXPRESS OR IMPLIED WARRANTIES WITH RESPECT TO THE PRODUCT (WHETHER RELATING TO THE CONDITION OR QUALITY OF THE PRODUCT, OR OTHERWISE) PROVIDED HEREUNDER OR OTHERWISE REGARDING THE AGREEMENT (INCLUDING, WITHOUT LIMITATION, WITH RESPECT TO ANY APPLICABLE DEALER PREPARATION), WHETHER ORAL OR WRITTEN, EXPRESS, IMPLIED OR STATUTORY. WITHOUT LIMITING THE FOREGOING, ANY IMPLIED WARRANTY OR CONDITION OF MERCHANTABILITY, THE IMPLIED WARRANTY AGAINST INFRINGEMENT, THE IMPLIED WARRANTY OR CONDITION OF FITNESS FOR A PARTICULAR PURPOSE, AND ANY IMPLIED WARRANTIES ARISING FROM COURSE OF DEALING OR USAGE OF TRADE ARE EXPRESSLY EXCLUDED AND DISCLAIMED BY GSFA. STATEMENTS MADE BY SALES CONSULTANTS OR IN PROMOTIONAL MATERIALS DO NOT CONSTITUTE WARRANTIES.

b. Exclusions of Incidental and Consequential Damages. In no event shall GSFA be liable for special, consequential, incidental, indirect or punitive damages incurred by Customer in connection with any matter arising out of or relating to the Agreement, or the breach thereof, even if GSFA has been advised of the possibility of such damages, and regardless of whether such damages arise out of breach of warranty, the Agreement, indemnity, whether resulting from non-delivery or from GSFA's own negligence, or otherwise, except and solely to the extent such damages arise from the gross negligence or willful misconduct of GSFA.

13. Default. The occurrence of one or more of the following events (each, an "**Event of Default**") shall constitute a default under the Agreement: (a) Customer's failure to pay any amounts due or to perform any of its obligations under the Agreement; (b) GSFA's failure to perform any of its obligations under the Agreement; (c) either Party becoming insolvent or becoming subject to bankruptcy or insolvency proceedings; (d) any representation made by either Party under the Agreement which is false in any material respect; (e) any action by Customer to dissolve, merge, consolidate or transfer a substantial portion of its property to another entity during the term of the Agreement; (f) any other material breach of the terms of the Agreement by a Party; or (g) a default or breach by Customer under any other agreement with GSFA or its affiliates.

14. Customer Responsible for Post-Delivery Use of Product. Except as expressly provided in Section 7.b above (with respect to remedying non-conforming Products), GSFA shall have no liability for the Product following delivery to Customer. Customer shall be solely responsible for, and shall indemnify, defend, and hold harmless GSFA, its agents, servants, successors and assigns from and against all losses, damages, injuries, claims, demands and expenses, including attorneys' fees and other legal expenses, of whatever nature, arising out of or in connection with Customer's use, storage, or operation of the Product following delivery, regardless of where, how, and by whom operated (except to the extent such losses are caused by any negligence or willful misconduct in connection with GSFA's own operation of the Product (e.g. in connection with servicing or maintenance of the Product). The provisions of this Section shall continue in full force and effect notwithstanding the termination of the Agreement, whether by expiration of time, by operation of law or otherwise. This provision is not intended to and shall not constitute the exclusive remedy of the Parties under the Agreement.

15. Force Majeure. GSFA shall not be responsible nor deemed to be in default of any provision of the Agreement on account of delays in performance due to causes which are beyond GSFA's or Manufacturer's control and which make GSFA's performance impracticable, including but not limited to wars, insurrections, strikes or labor unrest, riots, fires, storms, floods, other acts of nature, explosions, earthquakes, accidents, any act of federal, state or local government, failure or delays in transportation, inability to obtain necessary labor, supplies or manufacturing facilities, supply chain issues, allocation regulations or orders affecting materials, equipment, facilities or completed products, failure to obtain any required license or certificates, acts of God or the public enemy or terrorism, failure of transportation, disease, pandemics or epidemics, quarantine restrictions, failure of vendors (due to causes similar to those within the scope of this clause) to perform their agreements or labor troubles causing cessation, slowdown, or interruption of work.

16. Notice. Any notices, requests, consents, claims, demands, waivers and other communications required or permitted to be given hereunder must be given in writing at the address of each Party set forth below, or to such other address as either Party may substitute by written notice to the other in accordance with this Section 16, by one of the following methods: hand delivery; registered, express, or certified mail, return receipt requested, postage prepaid; or nationally recognized private express courier. All such communications will be deemed to have been given: (i) when delivered by hand (with written confirmation of receipt); (ii) on the third (3rd) calendar day after the date mailed, by registered, express or certified mail; or (iii) when delivered by the addressee if sent by a nationally recognized private express courier.

GSFA:	CUSTOMER:
Golden State Fire Apparatus Inc. 7400 Reese Road Sacramento, CA 95828	To the address listed in the Product Proposal

17. Contradictions. In the event of a conflict between the Agreement and any Change Order, or between Change Orders, the terms of the latest executed Change Order shall control.

18. Manufacturer's Statement of Origin. It is agreed that the manufacturer's statement of origin ("**MSO**") for the Product covered by the Agreement, if applicable, shall be retained and remain in the possession of GSFA per California Department of Vehicles (DMV) directives. Notwithstanding the foregoing, GSFA shall provide Customer with the original MSO if the Customer is self-registering, and Customer shall comply with all good-faith Process of Duty and other DMV requirements applicable to the Product and retain its own MSO.

19. Assignment. The relationship of the Parties established under the Agreement is that of independent contractors and neither Party is a partner, employee, agent, or joint venturer of or with the other. Neither Party may assign its rights and obligations under the Agreement unless it has obtained the prior written approval of the other Party.

20. Governing Law; Jurisdiction; Disputes. Without regard to any conflict of laws provisions, the Agreement is to be governed by and under the laws of the state of California. Prior to taking any legal action that may and/or can arise out of the Agreement, the Parties shall first attempt mediation with an agreed upon mediator. If the Parties cannot agree upon a mediator within thirty (30) calendar days of the submission of written notice of a dispute in accordance with Section 16 hereof, if any disputed matter remain unresolved within thirty (30) calendar days of the commencement of discussions, or if any party refuses to meet, then either party may submit any remaining disputes concerning and/or claim regarding the Agreement and/or the terms and conditions herein to the Superior Court, County of Sacramento (and the parties expressly consent to exclusive personal jurisdiction and venue before such court).

21. Entire Agreement; Amendments. The Agreement, including the Product Proposal, its exhibits and all valid Change Orders, is the exclusive agreement between the Parties regarding the subject matter contained herein and therein. No change in, modification of, or revision of the Agreement shall be valid unless in writing and signed by duly authorized representatives of both Parties with authority to sign such amendments to the Agreement.

END OF STANDARD TERMS AND CONDITIONS

GOLDEN STATE
FIRE APPARATUS

goldenstatefire.com

3 PRODUCT SPECIFICATIONS

Exhibit "B"

Proposal For: City of Santa Rosa Fire Department

Prepared By: Jon Bauer, Sales Consultant, Golden State Fire Apparatus, Inc.

December 22, 2025

CITY OF SANTA ROSA FIRE DEPARTMENT
Specifications For: One (1) Pierce Enforcer Type 1 Engine
December 22, 2025 (Proposal #51222-25)

Golden State Fire Apparatus is pleased to submit a proposal to Santa Rosa for a **Pierce® Enforcer Type 1 Engine,** per your request for quotation. The following paragraphs will describe in detail the apparatus, construction methods, and equipment proposed. This proposal will indicate size, type, model and make of components parts and equipment, providing proof of compliance with each and every item (except where noted) in the departments advertised specifications.

PIERCE MANUFACTURING was founded in 1913. Since then, we have been building bodies with one philosophy, "BUILD THE FINEST". Our skilled craftsmen take pride in their work, which is reflected, in the final product. We have been building fire apparatus since the early "forties" giving Pierce Manufacturing over 75 years of experience in the fire apparatus market. Pierce Manufacturing has built and put into service more than 62,500 apparatus, including more than 33,900 on Pierce custom chassis designed and built specifically for fire and emergency applications. Our Appleton, Wisconsin facility has over 870,000 total square feet of floor space situated on approximately 105 acres of land. Our Bradenton, Florida facility has 300,000 square feet of floor space situated on approximately 38 acres of land.

Our beliefs in high ethical standards are carried through in all of our commitments and to everyone with whom we do business. Honesty, Integrity, Accountability and Citizenship are global tenets by which we all live and work. Consequently, we neither engage in, nor have we ever been convicted of price fixing, bid rigging, or collusion in any domestic or international fire apparatus market.

Pierce has only one brand of fire apparatus "Pierce", ensuring you are receiving top of the line product that meets your specification.

In accordance with the current edition of applicable NFPA standards, this proposal will specify whether the fire department, manufacturer, or apparatus dealership will provide required loose equipment.

Images and illustrative material in this proposal are as accurate as known at the time of publication but are subject to change without notice. Images and illustrative material are for reference only and may include optional equipment and accessories and may not include all standard equipment.

GENERAL DESIGN AND CONSTRUCTION

To control quality, ensure compatibility, and provide a single source for service and warranty, the custom cab, chassis, pump module and body will be entirely designed, assembled/welded and painted in Pierce owned manufacturing facilities. This includes, but not limited to the cab weldment, the pumphouse module assembly, the chassis assembly, the body and the electrical system.

QUALITY AND WORKMANSHIP

Pierce has set the pace for quality and workmanship in the fire apparatus field. Our tradition of building the highest quality units with craftsmen second to none has been the rule right from the beginning and we demonstrate that ongoing commitment by: Ensuring all steel welding follows American Welding Society D1.1-2004 recommendations for structural steel welding. All aluminum welding follows American Welding society and ANSI D1.2-2003 requirements for structural welding of aluminum. All sheet metal welding follows American welding Society B2.1-2000 requirements for structural welding of sheet metal. Our flux core arc welding uses alloy rods, type 7000 and is performed to American

Welding Society standards A5.20-E70T1. Furthermore, all employees classified as welders are tested and certified to meet the American welding Society codes upon hire and every three (3) years thereafter. Pierce also employs and American Welding Society certified welding inspector in plant during working hours to monitor weld quality.

Pierce Manufacturing operates a Quality Management System under the requirements of ISO 9001. These standards sponsored by the International Organization for Standardization (ISO) specify the quality systems that are established by the manufacturer for design, manufacture, installation and service. A copy of the certificate of compliance is included with this proposal.

In addition to the Quality Management system, we also employ a Quality Achievement Supplier program to ensure the vendors and suppliers that we utilize meet the high standards we demand. That is just part of our overall "Quality at the Source" program at Pierce.

DELIVERY

The apparatus will be delivered under its own power to ensure proper break-in of all components while the apparatus is still under warranty. A qualified delivery representative shall deliver the apparatus and remain for a sufficient length of time to instruct personnel in proper operation, care and maintenance of the equipment delivered.

MANUAL AND SERVICE INFORMATION

At time of delivery, complete operation and maintenance manuals covering the apparatus will be provided. A permanent plate will be mounted in the driver's compartment specifying the quantity and type of fluids required including engine oil, engine coolant, transmission, pump transmission lubrication, pump primer and drive axle.

SAFETY VIDEO

At the time of delivery Pierce will also provide one (1) 39-minute, professionally produced apparatus safety video, in DVD format. A link to the video is also available on the Pierce Training website. This video will address key safety considerations for personnel to follow when they are driving, operating, and maintaining the apparatus, including the following: vehicle pre-trip inspection, chassis operation, pump operation, aerial operation, and safety during maintenance.

PERFORMANCE TESTS

A road test will be conducted with the apparatus fully loaded and a continuous run of no less than ten (10) miles. During that time the apparatus will show no loss of power, nor will it overheat. The transmission drive shaft or shafts and the axles will run quietly and be free of abnormal vibration or noise. The apparatus when fully loaded will not have less than 25 percent nor more than 50 percent on the front axle, and not less than 50 percent nor more than 75 percent on the rear axle. The apparatus will meet the current edition of applicable NFPA standards acceleration and braking requirements.

SERVICE AND WARRANTY SUPPORT

Pierce dealership support will be provided by Golden State EVS by operating a Pierce authorized service center. The service center will have factory-trained mechanics on staff versed in Pierce fire apparatus. The service facility will be located within two hundred (200) miles of the fire department.

In addition to the dealership, Pierce has service facilities located in both, Weyauwega, Wisconsin and Bradenton, Florida. Pierce also maintains a dedicated parts facility of over 100,000 square feet in Appleton, Wisconsin. The parts facility stocks in excess of $5,000,000 in parts dedicated to service and replacement parts. The parts facility employs a staff dedicated solely for the distribution and shipment of service and replacement parts.

Service parts for the apparatus being proposed can be found via Pierceparts.com which, is an interactive online tool that delivers information regarding your specific apparatus as well as the opportunity to register for training classes.

As a Pierce customer you have the ability to view the complete bill of materials for your specific apparatus, including assembly drawings, piece part drawings, and beneficial parts notations. You will also have the ability to search the complete Pierce item master through a parts search function which offers all Pierce SKU's and descriptions offered on all Pierce apparatus. Published component catalogs, which include proprietary systems along with an extensive operator's manual library is available for easy reference.

Pierce Manufacturing maintains a dedicated service and warranty staff of over 35 personnel, dedicated to customer support, which also maintains a 24 hour 7 day a week toll free hot line, four (4) on staff EVTs, and offers hands-on repair and maintenance training classes multiple times a year.

SINGLE SOURCE MANUFACTURER

Pierce Manufacturing, Inc. provides an integrated approach to the design and manufacture of our products that delivers superior apparatus and a dedicated support team. From our facilities, the chassis, cab weldment, cab, pumphouse (including the sheet metal enclosure, valve controls, piping and operators panel) and body will be entirely designed, tested, and hand assembled to the customer's exact specifications. The electrical system either hardwired or multiplexed, will be both designed and integrated by Pierce Manufacturing. The warranties relative to these major components (excluding component warranties such as engine, transmission, axles, pump, etc.) will be provided by Pierce as a single source manufacturer. Pierce's single source solution adds value by providing a fully engineered product that offers durability, reliability, maintainability, performance, and a high level of quality.

Your apparatus will be manufactured in Appleton, Wisconsin.

NFPA 2024 STANDARDS

This unit will comply with the NFPA standards effective January 1, 2024, except for fire department directed exceptions. These exceptions will be set forth in the Statement of Exceptions.

Certification of slip resistance of all stepping, standing and walking surfaces will be supplied with delivery of the apparatus.

All horizontal surfaces designated as a standing or walking surface that are greater than 48.00" above the ground must be defined by a 1.00" wide line along its outside perimeter. Perimeter markings and designated access paths to destination points will be identified on the customer approval print and are shown as approximate.

Actual location(s) will be determined based on materials used and actual conditions at final build. Access paths may pass through hose storage areas and opening or removal of covers or restraints may be required. Access paths may require the operation of devices and equipment such as the aerial device or ladder rack.

A plate that is highly visible to the driver while seated will be provided. This plate will show the overall height, length, and gross vehicle weight rating.

The manufacturer will have programs in place for training, proficiency testing and performance for any staff involved with certifications.

An official of the company will designate, in writing, who is qualified to witness and certify test results.

NFPA COMPLIANCY

Apparatus proposed by the bidder will meet the applicable requirements of the National Fire Protection Association (NFPA) as stated in current edition at time of contract execution. Fire department's specifications that differ from NFPA specifications will be indicated in the proposal as "non-NFPA".

PUMP TEST

Underwriters Laboratory (UL) will test, approved, and certify the pump. The test results and the pump manufacturer's certification of hydrostatic test; the engine manufacturer's certified brake horsepower curve; and the pump manufacturer's record of pump construction details will be forwarded to the Fire Department.

VEHICLE INSPECTION PROGRAM CERTIFICATION

To assure the vehicle is built to current NFPA 1900 standards, the apparatus, in its entirety, will be third-party, independent, audit-certified through Underwriters Laboratory (UL) that it is built and complies to all applicable standards in the current edition. The certification includes: all design, production, operational, and performance testing of not only the apparatus, but those components that are installed on the apparatus.

A placard will be affixed in the driver's side area stating the third party agency, the date, the standard and the certificate number of the whole vehicle audit.

PRE-CONSTRUCTION, CUSTOMER LOCATION

A pre-construction meeting will be conducted at customer location.The intent of this meeting is to review and finalize, in detail, the specifications prior to the start of production. The pre-construction meeting will have a duration of one (1) day and be scheduled at times mutually agreed upon between Golden State Fire Apparatus and the Customer.

FINAL INSPECTION FACTORY TRIP

A final inspection trip to the manufacturing facility will be provided for three (3) Customer representative(s). The intent of this trip is to ensure that the apparatus is built to specification and to detect any deficiencies that require correction. The final inspection trip will have a duration of five (5) days and four (4) nights and be scheduled at times mutually agreed upon between Golden State Fire Apparatus (GSFA). and the Customer. Costs for airfare, lodging, meals and ground transportation while at the manufacturers location will be the responsibility of GSFA. Air travel will be from one of the following airports: Sacramento, San Francisco or San Jose.

Costs such as Customer ground transportation in California, Customer airport parking, Customer luggage fees and Customer incidentals while traveling to the factory will be the responsibility of the Customer. Flight reservations are non-refundable and in the event of a cancellation after booking, the Customer will be responsible for all costs associated with this cancellation, which may include not only the original ticket cost but also any change or cancellation fees imposed by the airline and/ or travel agency. Flight reservations are also non-transferable.

PERFORMANCE BOND, 1 YEAR

The successful bidder will furnish a Performance and Payment bond (Bond) equal to 100 percent of the total contract amount within 30 days of the notice of award. Such Bond will be in a form acceptable to the Owner and issued by a surety company included within the Department of Treasury's Listing of Approved Sureties (Department Circular 570) with a minimum A.M. Best Financial Strength Rating of A and Size Category of XV. In the event of a bond issued by a surety of a lesser Size Category, a minimum Financial Strength rating of A+ is required.

Bidder and Bidder's surety agree that the Bond issued hereunder, whether expressly stated or not, also includes the surety's guarantee of the vehicle manufacturer's Basic One (1) Year Limited Warranty period included within this proposal. Owner agrees that the penal amount of this bond will be simultaneously amended to 25 percent of the total contract amount upon satisfactory acceptance and delivery of the vehicle(s) included herein. Notwithstanding anything contained within this contract to the contrary, the surety's liability for any warranties of any type will not exceed one (1) year from the date of such satisfactory acceptance and delivery, or the actual Basic One (1) Year Limited Warranty period, whichever is shorter.

Due to global supply chain constraints, any delivery date contained herein is a good faith estimate as of the date of this order/contract, and merely an approximation based on current information. Delivery updates will be made available, and a final firm delivery date will be provided as soon as possible.

If the Producer Price Index of Components for Manufacturing [www.bls.gov Series ID: WPUID6112] ("PPI") has increased at a compounded annual growth rate of 5.0% or more between the month Pierce accepts the order ("Order Month") and a month 14 months prior to the then predicted Ready For Pickup date ("Evaluation Month"), then pricing may be updated in an amount equal to the increase in PPI over 5.0% for each year or fractional year between the Order Month and the Evaluation Month.
The seller will document any such updated price for the customer's approval before proceeding and provide an option to cancel the order.

APPROVAL DRAWING
A drawing of the proposed apparatus will be prepared and provided to the purchaser for approval before construction begins. The Pierce sales representative will also be provided with a copy of the same drawing. The finalized and approved drawing will become part of the contract documents. This drawing will indicate the chassis make and model, location of the lights, siren, horns, compartments, major components, etc.

A "revised" approval drawing of the apparatus will be prepared and submitted by Pierce to the purchaser showing any changes made to the approval drawing.

DRAWING, COMPARTMENT LAYOUT
A basic drawing will be provided for the interior body compartments. This drawing will be provided for graphic representation only and will include such things as shelves, trays, reels, dividers, air control panels, air bottle storage bins, poly boxes & etc.

DRAWING, CAB TOP VIEW
On the sales drawing a top view of the cab seating will be provided. The top view will be a reference only of the seating in the order.

ENFORCER CHASSIS
The Pierce Enforcer™ is the custom chassis developed exclusively for the fire service. Chassis provided will be a new, tilt-type custom fire apparatus. The chassis will be manufactured in the apparatus body builder's facility eliminating any split responsibility. The chassis will be designed and manufactured for heavy-duty service, with adequate strength, capacity for the intended load to be sustained, and the type of service required. The chassis will be the manufacturer's first line tilt cab.

TARGET OVERALL HEIGHT
The target overall height of the apparatus will be 117.00".

ANGLE OF APPROACH
The angle of approach will be 14.00 degrees. This will be effective with the truck in a loaded state.

ANGLE OF DEPARTURE
The angle of departure will be 11.50 degrees. This will be effective with the truck in a loaded state.

WHEELBASE
The wheelbase of the vehicle will be 177.50".

GVW RATING
The gross vehicle weight rating will be 43,500 lbs..

FRAME
The chassis frame will be built with two (2) steel channels bolted to five (5) cross members or more, depending on other options of the apparatus. The side rails will have a 13.38" tall web over the front and mid sections of the chassis, with a continuous smooth taper to 10.75" over the rear axle. Each rail will have a section modulus of 25.992 cubic inches and a resisting bending moment (rbm) of 3,119,040

in-lb over the critical regions of the frame assembly, with a section modulus of 18.96 cubic inches with an rbm of 2,275,200 in-lb over the rear axle. The frame rails will be constructed of 120,000 psi yield strength heat-treated 0.38" thick steel with 3.50" wide flanges.

FRAME REINFORCEMENT

In addition, a mainframe internal liner will be provided. The liner will be an internal "C" design that steps to an internal "L" design over the rear axle. It will be heat-treated steel measuring 12.50" x 3.00" x 0.25" through the front portion of the liner, stepping to 9.38" x 3.00" x 0.25" through the rear portion of the liner. Each liner will have a section modulus of 13.58 cubic inches, yield strength of 110,000 psi, and rbm of 1,494,042 in-lb. Total rbm at wheelbase center will be 4,391,869 in-lb.

The frame liner will be mounted inside of the chassis frame rail and extend the full length of the frame.

FRONT NON DRIVE AXLE

The Oshkosh TAK-4® front axle will be of the independent suspension design with a ground rating of 19,500 lb.

Upper and lower control arms will be used on each side of the axle. Upper control arm castings will be made of 100,000-psi yield strength 8630 steel and the lower control arm casting will be made of 55,000-psi yield ductile iron.

The center cross members and side plates will be constructed out of 80,000-psi yield strength steel.

Each control arm will be mounted to the center section using elastomer bushings. These rubber bushings will rotate on low friction plain bearings and be lubricated for life. Each bushing will also have a flange end to absorb longitudinal impact loads, reducing noise and vibrations.

There will be nine (9) grease fittings supplied, one (1) on each control arm pivot and one (1) on the steering gear extension.

The upper control arm will be shorter than the lower arm so that wheel end geometry provides positive camber when deflected below rated load and negative camber above rated load.

Camber at load will be zero degrees for optimum tire life.

The ball joint bearing will be of low friction design and be maintenance free.

Toe links that are adjustable for alignment of the wheel to the center of the chassis will be provided.

The wheel ends must have little to no bump steer when the chassis encounters a hole or obstacle.

The steering linkage will provide proper steering angles for the inside and outside wheel, based on the vehicle wheelbase.

The axle will have a turning angle of up to 45 degrees.

FRONT SUSPENSION

Front Oshkosh TAK-4™ independent suspension will be provided with a minimum ground rating of 19,500 lb.

The independent suspension system will be designed to provide maximum ride comfort. The design will allow the vehicle to travel at highway speeds over improved road surfaces and at moderate speeds over rough terrain with minimal transfer of road shock and vibration to the vehicle's crew compartment.

Each wheel will have torsion bar type spring. In addition, each front wheel end will also have energy absorbing jounce bumpers to prevent bottoming of the suspension.

The suspension design will be such that there is at least 10.00" of total wheel travel and a minimum of 3.75" before suspension bottoms.

The torsion bar anchor lock system allows for simple lean adjustments, without the use of shims. One can adjust for a lean within 15 minutes per side. Anchor adjustment design is such that it allows for ride height adjustment on each side.

The independent suspension was put through a durability test that simulated 140,000 miles of inner city driving.

FRONT SHOCK ABSORBERS

KONI heavy-duty telescoping shock absorbers will be provided on the front suspension.

FRONT OIL SEALS

Oil seals with viewing window will be provided on the front axle.

FRONT TIRES

The front tires will be Michelin 315/80R22.5 radials, 20 ply, load range L, all position XZU® S2 tread, rated for 20,000 lb maximum axle load and 75 mph maximum speed.

The tires will be mounted on Alcoa 22.50" x 9.00" polished aluminum disc wheels with a ten (10) stud, 11.25" bolt circle.

REAR AXLE

The rear axle will be a Meritor™, Model RS-23-186, with a capacity of 24,000 lb.

TOP SPEED OF VEHICLE

NFPA 1900 and ULC 515, 2024 edition requires limits on the top speed of vehicles. NFPA 7.16.1 requires that the maximum top speed of fire apparatus with a GVWR over 33,000 lb will not exceed either 68 mph or the manufacturer's maximum fire service speed rating for the tires installed on the apparatus, whichever is lower. NFPA 7.16.2 requires that if the combined water tank and foam agent tank on the fire apparatus exceed 1250 gallons or the GVWR of the vehicle is over 50,000 lb, the maximum top speed of the apparatus will not exceed either 60 mph or the manufacturer's maximum fire service speed rating for the tires installed on the apparatus, whichever is lower. It is the intention of the standard to improve safety by limiting the speed of all apparatus to 68 mph, and tankers or heavy

apparatus to 60 mph. By requesting an exception to this requirement, the purchasing authority is consciously choosing to operate their apparatus at speeds above the limits designated as safe speeds by the NFPA Technical Committee on Fire Department Apparatus.

The top speed of the apparatus as manufactured exceeds the NFPA requirements. Per fire department specification of a top speed that exceeds NFPA requirements, the apparatus will be non-compliant to NFPA 1900 and ULC 515 standards at time of contract execution.

The rear tires being specified have a top speed limit of 72 mph / 116 kph from the tire manufacturer.

REAR SUSPENSION
The rear suspension will be Standens, semi-elliptical, 3.00" wide x 52.50" long, with a ground rating of 24,000 lb. The spring hangers will be castings.

The two (2) top leaves will wrap the forward spring hanger pin, and the rear of the spring will be a slipper style end that will ride in a rear slipper hanger.

A steel encased rubber bushing will be used in the spring eye. The steel encased rubber bushing will be maintenance free and require no lubrication.

SHOCK ABSORBERS
Heavy-duty telescoping Koni shock absorbers will be provided on the rear axle.

REAR OIL SEALS
Oil seals will be provided on the rear axle(s).

SYNTHETIC GEAR LUBE
The rear axle will be supplied with synthetic gear lube, as recommended by the axle manufacturer.

MODIFICATION
Rear suspension axle spacers will be added.

REAR TIRES
Rear tires will be four (4) Michelin 12R22.50 radials, 16 ply all season XDN2 tread, rated for 27,120 lb maximum axle load and 75 mph maximum speed.

The tires will be mounted on Alcoa 22.50" x 8.25" polished aluminum disc wheels with a ten (10) stud 11.25" bolt circle.

TIRE BALANCE
All tires will be balanced with Counteract balancing beads. The beads will be inserted into the tire and eliminate the need for wheel weights.

TIRE PRESSURE MANAGEMENT
There will be a RealWheels LED AirSecure™ tire alert pressure management system provided, that will monitor each tire's pressure. A sensor will be provided on the valve stem of each tire for a total of six (6) tires.

The sensor will calibrate to the tire pressure when installed on the valve stem for pressures between 10 and 200 psi. The sensor will activate an integral battery operated LED when the pressure of that tire drops 5 to 8 psi.

Removing the cap from the sensor will indicate the functionality of the sensor and battery. If the sensor and battery are in working condition, the LED will immediately start to flash.

CHROME LUG NUT COVERS
Chrome lug nut covers will be supplied on front and rear wheels.

FRONT HUB COVERS
Stainless steel hub covers will be provided on the front axle. An oil level viewing window will be provided.

REAR HUB COVERS
A pair of stainless steel high hat hub covers will be provided on rear axle hubs.

MUD FLAPS
Mud flaps with a Pierce logo will be installed behind the front and rear wheels.

WHEEL CHOCKS
There will be one (1) pair of folding Ziamatic, Model SAC-44-E, aluminum alloy, Quick-Choc wheel blocks, with easy-grip handle provided.

Wheel Chock Brackets
There will be one (1) pair of Zico, Model SQCH-44-H, horizontal mounting wheel chock brackets provided for the Ziamatic, Model SAC-44-E, folding wheel chocks. The brackets will be made of aluminum and consist of a quick release spring loaded rod to hold the wheel chocks in place. The brackets will be mounted forward of the right side rear tire and forward of the left side rear tire below compartment LS3.

ELECTRONIC STABILITY CONTROL
A vehicle control system will be provided as an integral part of the ABS brake system from Meritor Wabco.

The system will monitor and update the lateral acceleration of the vehicle and compare it to a critical threshold where a side roll event may occur. If the critical threshold is met, the vehicle control system will automatically reduce engine RPM, engage the engine retarder (if equipped), and selectively apply brakes to the individual wheel ends of the front and rear axles to reduce the possibility of a side roll event.

The system will monitor directional stability through a lateral accelerometer, steer angle sensor and yaw rate sensor. If spinout or drift out is detected, the vehicle control system will selectively apply brakes to the individual wheel ends of the front and rear axles to bring the vehicle back to its intended direction.

ANTI-LOCK BRAKE SYSTEM

The vehicle will be equipped with a Wabco 4S4M, anti-lock braking system. The ABS will provide a four (4) channel anti-lock braking control on both the front and rear wheels. A digitally controlled system that utilizes microprocessor technology will control the anti-lock braking system. Each wheel will be monitored by the system. When any wheel begins to lockup, a signal will be sent to the control unit. This control unit will then reduce the braking of that wheel for a fraction of a second and then reapply the brake. This anti-lock brake system will eliminate the lockup of any wheel thus helping to prevent the apparatus from skidding out of control.

AUTOMATIC TRACTION CONTROL

An anti-slip feature will be included with the ABS. The Automatic Traction Control will be used for traction in poor road and weather conditions. The Automatic Traction Control will act as an electronic differential lock that will not allow a driving wheel to spin, thereby supplying traction at all times. The ABS electronic control unit (ECU) will work with the engine ECU, sharing information concerning wheel slip. Engine ECU will use information to control engine speed, allowing only as much throttle application as required for the available traction, regardless of how much the driver is asking for. An "off road traction" switch will be provided on the instrument panel. Activation of the switch will allow additional tire slip to let the truck climb out and get on top of deep snow or mud.

BRAKES

The service brake system will be full air type.

The front brakes will be Knorr/Bendix disc type with a 17.00" ventilated rotor for improved stopping distance.

The brake system will be certified, third party inspected, for improved stopping distance.

The rear brakes will be Meritor™ 16.50" x 8.63" cam operated with automatic slack adjusters. Dust shields will be provided.

BRAKE SYSTEM AIR COMPRESSOR

The air compressor will be a Cummins/WABCO with 18.7 cubic feet per minute output.

BRAKE SYSTEM

The brake system will include:

- Brake treadle valve
- Heated automatic moisture ejector on air dryer
- Total air system minimum capacity of 4,272 cubic inches
- Two (2) air pressure gauges with a red warning light and an audible alarm, that activates when air pressure falls below 60 psi
- Spring set parking brake system
- Parking brake operated by a push-pull style control valve
- A parking "brake on" indicator light on instrument panel

- Park brake relay/inversion and anti-compounding valve, in conjunction with a double check valve system, with an automatic spring brake application at 40 psi
- A pressure protection valve to prevent all air operated accessories from drawing air from the air system when the system pressure drops below 80 psi (550 kPa)
- 1/4 turn drain valves on each air tank

The air tank will be primed and painted to meet a minimum 750 hour salt spray test.

The air tanks will be painted same as frame color.

To reduce the effects of corrosion, the air tank will be mounted with stainless steel brackets.

BRAKE SYSTEM AIR DRYER
The air dryer will be WABCO System Saver 1200 with spin-on coalescing filter cartridge and 100 watt heater.

BRAKE LINES
Color-coded nylon brake lines will be provided. The lines will be wrapped in a heat protective loom in the chassis areas that are subject to excessive heat.

AIR INLET/OUTLET
One (1) air inlet/outlet will be installed with the female coupling located on the driver side pump panel. This system will tie into the "wet" tank of the brake system and include a check valve in the inlet line and an 85 psi pressure protection valve in the outlet line. The air outlet will be controlled by a needle valve.

A mating male fitting will be provided with the loose equipment.

The air inlet will allow a shoreline air hose to be connected to the vehicle. This will allow station air to be supplied to the brake system of the vehicle to insure constant air pressure.

The male and female couplings will have .250" NPT thread.

RECESSED BOX FOR AIR FITTING
One (1) air inlet will have an smooth aluminum recessed box provided. The box(es) will allow the air fitting to be recessed inside the stepwell to prevent damage. driver side pump panel.

AIR INLET FITTING
An McMaster Carr 6534K16 brass fitting will be used for the air inlet/outlet.

AIR COMPRESSOR, BRAKE SYSTEM MAINTENANCE
A Kussmaul, Model 091-9B-4 air compressor will be provided. It will be driven by the 120 volt shoreline electrical system and will be located left side, rear facing seat riser compartment.

The compressor will maintain the air pressure in the chassis air brake system while the vehicle is not in use.

A pressure switch will sense when the system pressure drops and automatically start the compressor, which then will run until pressure is restored.

ENGINE

The chassis will be powered by an electronically controlled engine as described below:

Make:	Cummins®
Model:	X15
Power:	525 hp at 1700 rpm
Torque:	1850 lb-ft at 1150 rpm
Governed Speed:	2100 rpm
Emissions Level:	EPA 2027
Fuel:	Diesel
Cylinders:	Six (6)
Displacement:	912 cubic inches (14.9L)
Starter:	Delco 39MT+™
Fuel Filters:	Frame mounted spin-on style filter from Cummins®.

The engine will include On-board diagnostics (OBD), which provides self diagnostic and reporting. The system will give the owner or repair technician access to state of health information for various vehicle sub systems. The system will monitor vehicle systems, engine and after treatment. The system will illuminate a malfunction indicator light on the dash console if a problem is detected.

The engine will be filled with FA-4 10W30 oil as required by Cummins.

REMOTE MOUNTED ENGINE FILTERS

The engine fuel and oil filters will be remote mounted for ease of maintenance.

HIGH IDLE

A high idle switch will be provided, inside the cab, on the instrument panel, that will automatically maintain a preset engine rpm. A switch will be installed, at the cab instrument panel, for activation/deactivation.

The high idle will be operational only when the parking brake is on and the truck transmission is in neutral. A green indicator light will be provided, adjacent to the switch. The light will illuminate when the above conditions are met. The light will be labeled "OK to Engage High Idle."

CLUTCH FAN

A Horton® fan clutch will be provided. The fan clutch will be automatic when the pump transmission is in "Road" position, and fully engaged in "Pump" position.

ENGINE AIR INTAKE

The engine air intake will be located above the engine cooling package. It will draw fresh air from the front of the apparatus through the radiator grille.

The ember separator is designed to prevent road dirt and recirculating hot air from entering the engine.

The ember separator will be easily accessible by tilting the cab.

EXHAUST SYSTEM

The exhaust system will be stainless steel from the turbo to the engine's aftertreatment device. The exhaust system will include an aftertreatment device to meet current EPA standards. An insulation wrap will be provided on all exhaust pipe between the turbo and the aftertreatment device to minimize the transfer of heat to the cab.

The exhaust will terminate horizontally ahead of the right side rear wheels and will be flush with the body rub rail. The exhaust pipes will be aluminized steel.

There will be a stainless steel exhaust diffuser reduced to 5.00" in the center to accommodate the fire department's air recovery system with a standard straight tip on the end provided to reduce the temperature of the exhaust as it exits. Heat deflector shields will be provided to isolate chassis and body components from the heat of the tailpipe diffuser.

RADIATOR

The radiator and the complete cooling system will meet or exceed the current edition of applicable NFPA and engine manufacturer cooling system standards.

For maximum corrosion resistance and cooling performance, the entire radiator core will be constructed using long life aluminum alloy. The radiator core will consist of aluminum fins, having a serpentine design, brazed to aluminum tubes.

The radiator core will have a minimum front area of 1060 square inches.

The radiator will be compatible with commercial antifreeze solutions.

The radiator assembly will be isolated from the chassis frame rails with rubber isolators to prevent the development of leaks caused by twisting or straining when the apparatus operates over uneven terrain.

The radiator will include a de-aeration/expansion tank. For visual coolant level inspection, the radiator will have a built-in sight glass. The radiator will be equipped with a 15 psi pressure relief cap.

A drain port will be located at the lowest point of the cooling system and/or the bottom of the radiator to permit complete flushing of the coolant from the system.

Shields or baffles will be provided to prevent recirculation of hot air to the inlet side of the radiator.

COOLANT LINES

Gates, or Goodyear, rubber hose will be used for all engine coolant lines installed by Pierce Manufacturing.

Hose clamps will be stainless steel constant torque type to prevent coolant leakage. They will expand and contract according to coolant system temperature thereby keeping a constant clamping pressure on the hose.

FUEL TANK

A 65 gallon fuel tank will be provided and mounted at the rear of the chassis. The tank will be constructed of 12-gauge, hot rolled steel. It will be equipped with swash partitions and a vent. To eliminate the effects of corrosion, the fuel tank will be mounted with stainless steel straps.

A .75" drain plug will be located in a low point of the tank for drainage.

The engine fuel fill inlet will be located adjacent to the DEF inlet and a single air bottle behind a common door on the driver side of the vehicle. The fuel fill inlet will be marked "Ultra Low Sulfur - Diesel Fuel Only."

A .50" diameter vent will be installed from tank top to just below fuel fill inlet.

The fuel tank will meet all FHWA 393.67 requirements including a fill capacity of 95 percent of tank volume.

All fuel lines will be provided as recommended by the engine manufacturer.

DIESEL EXHAUST FLUID TANK

A 4.5 gallon diesel exhaust fluid (DEF) tank will be provided and mounted in the driver's side body rearward of the rear axle.

A 0.50" drain plug will be provided in a low point of the tank for drainage.

A fill inlet will be provided and marked "Diesel Exhaust Fluid Only". The fill inlet will be located adjacent to the air bottle storage behind a common door on the driver side of the vehicle.

The tank will meet the engine manufacturers requirement for 10 percent expansion space in the event of tank freezing.

The tank will include an integrated heater unit that utilizes engine coolant to thaw the DEF in the event of freezing.

FUEL PRIMING PUMP

A Cummins automatic electronic fuel priming pump will be integrated as part of the engine.

FUEL SHUTOFF

A fuel line shutoff valve will be installed on both the inlet and outlet of the primary fuel filter. Fuel line shutoff valves will be installed in the suction fuel line and the return fuel line at the fuel tank.

FUEL COOLER

An air to fuel cooler will be installed in the engine fuel return line.

FUEL SEPARATOR

The engine will be equipped with a Racor in-line spin-on fuel and water separator in addition to the engine fuel filters.

TRANSMISSION

An Allison 6th generation, Model EVS 4000PR, electronic, torque converting, automatic transmission with retarder will be provided.

The transmission will be equipped with prognostics to monitor oil life, filter life, and transmission health. A wrench icon on the shift selector's digital display will indicate when service is due.

Two (2) PTO openings will be located on left side and top of converter housing (positions eight (8) o'clock and one (1) o'clock).

A transmission temperature gauge, with amber light and audible alarm, will be installed on the cab instrument panel.

The transmission retarder control will be activated 33 percent by release of the accelerator pedal or 66 percent by slight application of the brake pedal, or 100 percent by heavy application of brake pedal. A second on/off switch is provided to activate and deactivate the auto apply portion.

The transmission will have the 1600 ft. lb. torque (medium) spring setting for retardation force.

The transmission retarder will have a master "on/off" switch on the instrument panel. A red indicator light will be provided to warn that the transmission is being overworked.

The retarder will be wired to the brake lights so they are energized when the retarder is slowing the vehicle down.

The ABS system will automatically disengage the auxiliary braking device when required.

TRANSMISSION SHIFTER

A six (6)-speed push button shift module with the five (5) + one (1) "Mode" button will be mounted to right of driver on console. Shift position indicator will be indirectly lit for after dark operation.

The transmission ratio will be:

1st	3.51 to 1.00
2nd	1.91 to 1.00
3rd	1.43 to 1.00
4th	1.00 to 1.00
5th	0.75 to 1.00
6th	0.64 to 1.00
R	4.80 to 1.00

TRANSMISSION COOLER

An externally mounted Modine bar plate transmission oil cooler will be provided using engine coolant to control the transmission oil temperature. The internal bar plates will be constructed of stainless steel. The cooler's housing will be constructed of 1020 steel, coated to protect from corrosion. The cooler will be tagged with information including OEM part number, vendor serial number and date / lot code.

An externally mounted Modine bar plate transmission oil cooler will be provided using engine coolant to control the transmission retarder oil temperature. The internal bar plates will be constructed of stainless steel. The cooler's housing will be constructed of 1020 steel, coated to protect from corrosion. The cooler will be tagged with information including OEM part number, vendor serial number and date / lot code.

DOWNSHIFT MODE (W/ENGINE BRAKE)

The transmission will be provided with an aggressive downshift mode.

This will provide earlier transmission downshifts to 3rd gear from 6th gear, resulting in improved engine braking performance.

TRANSMISSION FLUID

The transmission will be provided with TranSynd, or other Allison approved TES-668 heavy duty synthetic transmission fluid.

DRIVELINE

Drivelines will be a heavy-duty metal tube and be equipped with Spicer® 1810 universal joints.

The shafts will be dynamically balanced before installation.

A splined slip joint will be provided in each driveshaft where the driveline design requires it. The slip joint will be coated with Glidecoat® or equivalent.

STEERING

Dual Sheppard, Model M110, steering gears, with integral heavy-duty power steering, will be provided. For reduced system temperatures, the power steering will incorporate an air to oil cooler and an Eaton, Model VN20, hydraulic pump with integral pressure and flow control. All power steering lines will have wire braded lines with crimped fittings.

A tilt and telescopic steering column will be provided to improve fit for a broader range of driver configurations.

STEERING WHEEL

The steering wheel will be 18.00" in diameter, have tilting and telescoping capabilities, and a four (4)-spoke design.

There will be a switch pod provided on each side of the steering wheel between the spokes. The switch pods will be an integral part of the steering wheel. Each switch pod will contain four (4) switches. The following switches will be provided:

- Air horn
- Emergency lighting
- Area lighting
- Front dome light
- Rear dome light
- Q2B siren activate
- Q2B siren brake
- Wiper mist
- Full floating horn pad

LOGO AND CUSTOMER DESIGNATION ON HORN BUTTON

The steering wheel will have an emblem containing the Pierce logo and customer name. The emblem will have three (3) rows of text for the customer's department name. There will be a maximum of eight (8) characters in the first row, 11 characters in the second row and 11 characters in the third row.

The first row of text will be: SANTA

The second row of text will be: ROSA

The third row of text will be: FIRE DEPT

BUMPER

A one (1) piece bumper manufactured from 0.25" formed steel with a 0.38" bend radius will be provided. The bumper will be a minimum of 10.00" high with a 1.50" top and bottom flange.

A 9.00" formed steel channel will be mounted directly behind bumper for additional strength.

The bumper will be metal finished and painted to match the lower job color of the apparatus.

Gravel Pan

A gravel pan, constructed of bright aluminum treadplate, will be furnished between the bumper and cab face.

LIFT AND TOW MOUNTS

Mounted to the frame extension will be lift and tow mounts. The lift and tow mounts will be designed and positioned to adapt to certain tow truck lift systems.

The lift and tow mounts with eyes will be painted the same color as the frame.

TOW EYES

Two (2) chrome tow eyes will be mounted through the front face of the bumper.

The inner and outer edges of the tow eyes will have a .25" radius.

Tow eyes will be mounted directly to the bumper frame.

Cutouts will be provided in the front face of stainless steel bumper to allow tow eyes to extend out the front.

The tow eyes will be designed and positioned to allow up to a 9,000 lb straight horizontal pull in line with the centerline of the vehicle. The tow eyes will not be used for lifting of the apparatus.

FRONT BUMPER NOTCH

The front bumper will be notched for recessing of the Q2B siren. The notch will be designed so that the bumper is one continuous piece. The notch will be welded in place for strength with a continuous top and bottom flange. All welds will be metal finished for appearance. The siren will be located left side of the bumper.

CAB

The Enforcer cab will be designed specifically for the fire service and manufactured by the chassis builder.

The cab will be built by the apparatus manufacturer in a facility located on the manufacturer's premises.

For reasons of structural integrity and enhanced occupant protection, the cab will be a heavy duty design, constructed to the following minimal standards.

The cab will have 12 main vertical structural members located in the A-pillar (front cab corner posts), B-pillar (side center posts), C-pillar (rear corner posts), and rear wall areas. The A-pillar will be constructed of solid A356-T5 aluminum castings. The B-pillar and C-pillar will be constructed from 0.13" wall extrusions. The rear wall will be constructed of two (2) 2.00" x 2.00" outer aluminum extrusions and two (2) 2.00" x 1.00" inner aluminum extrusions. All main vertical structural members will run from the floor to 4.625" x 3.864" x 0.090" thick roof extrusions to provide a cage-like structure with the A-pillar and roof extrusions being welded into a 0.25" thick corner casting at each of the front corners of the roof assembly.

The front of the cab will be constructed of a 0.13" firewall plate, covered with a minimum 0.090" front skin thickness, and reinforced with a full width x 0.50" thick cross-cab support located just below the windshield and fully welded to the engine tunnel. The cross-cab support will run the full width of the cab and weld to each A-pillar, the 0.13" firewall plate, and the front skin.

The cab floors will be constructed of 0.125" thick aluminum plate and reinforced at the firewall with an additional 0.375" thick cross-floor support providing a total thickness of 0.50" of structural material at the front floor area. The front floor area will also be supported with two (2) triangular 0.30" wall extrusions that also provides the mounting point for the cab lift. This tubing will run from the floor wireway of the cab to the engine tunnel side plates, creating the structure to support the forces created when lifting the cab.

The cab will be 96.00" wide (outside door skin to outside door skin) to maintain maximum maneuverability.

The centerline of front axle to the rear of the cab will be 70.00" long.

The overall height (from the cab roof to the ground) of approximately 99.00". The overall height listed will be calculated based on a truck configuration with the lowest suspension weight rating, the smallest diameter tires for the suspension, no water weight, no loose equipment weight, and no personnel weight. Larger tires, wheels, and suspension will increase the overall height listed.

The floor to ceiling height inside the crew cab will be 54.50" in the center and outboard positions.

The crew cab floor will measure 46.00" from the rear wall to the back side of the rear facing seat risers.

The medium block engine tunnel, at the rearward highest point (knee level), will measure 61.50" to the rear wall. The big block engine tunnel will measure between 45.00" and 51.50" to the rear wall, depending on the engine.

The crew cab will be a totally enclosed design with the interior area completely open to improve visibility and verbal communication between the occupants.

The cab will be a full tilt cab style.

A 3-point cab mount system with rubber isolators will improve ride quality by isolating chassis vibrations from the cab.

CAB ROOF DRIP RAIL

For enhanced protection from inclement weather, a drip rail will be furnished on the sides of the cab. The drip rail will be painted to match the cab roof, and bonded to the sides of the cab. The drip rail will extend the full length of the cab roof.

FENDER LINERS

Full circular inner fender liners in the wheel wells will be provided.

PANORAMIC WINDSHIELD

A one (1)-piece safety glass windshield will be provided with over 2,775 square inches of clear viewing area. The windshield will be full width and will provide the occupants with a panoramic view. The windshield will consist of three (3) layers: outer light, middle safety laminate, and inner light. The outer light layer will provide superior chip resistance. The middle safety laminate layer will prevent the windshield glass pieces from detaching in the event of breakage. The inner light will provide yet another chip resistant layer. The cab windshield will be bonded to the aluminum windshield frame using a urethane adhesive. A custom frit pattern will be applied on the outside perimeter of the windshield for a finished automotive appearance.

WINDSHIELD WIPERS

Three (3) electric windshield wipers with washer will be provided that meet FMVSS and SAE requirements.

The washer reservoir will be able to be filled without raising the cab.

ENGINE TUNNEL

Engine tunnel side walls will be constructed of 0.375" aluminum. The top will be constructed of 0.125" aluminum and will be tapered at the top to allow for more driver and passenger elbow room.

The engine tunnel will be insulated for protection from heat and sound. Perforated foil faced insulation will be over a 1.00" thick closed cell foam affixed with pressure sensitive adhesive and further secured with mechanical fasteners. Thermal rating for this insulation will be -40 degrees Fahrenheit to 300 degrees Fahrenheit. The noise insulation keeps the dBA level within the limits stated in the current edition of applicable NFPA standards.

The engine tunnel will be no higher than 18.00" off the crew cab floor.

INTERIOR CAB INSULATION

The cab will include 1.00" insulation in the ceiling, 1.50" insulation in the side walls, a minimum of 1.00" insulation in the crew cab floor, and 2.00" insulation in the rear wall to maximize acoustic absorption and thermal insulation.

CAB REAR WALL EXTERIOR COVERING

The exterior surface of the rear wall of the cab will be overlaid with bright aluminum treadplate except for areas that are not typically visible when the cab is lowered.

CAB LIFT

A hydraulic cab lift system will be provided consisting of an electric powered hydraulic pump, dual lift cylinders, and necessary hoses and valves.

Hydraulic pump will have a manual override for backup in the event of electrical failure.

Lift controls will be located on the right side pump panel or front area of the body in a convenient location.

The cab will be capable of tilting 43 degrees to accommodate engine maintenance and removal.

The cab will be locked down by a 2-point normally closed spring loaded hook type latch that fully engages after the cab has been lowered. The system will be hydraulically actuated to release the normally closed locks when the cab lift control is in the raised position and cab lift system is under pressure. When the cab is completely lowered and system pressure has been relieved, the spring loaded latch mechanisms will return to the normally closed and locked position.

The hydraulic cylinders will be equipped with a velocity fuse that protects the cab from accidentally descending when the control is located in the tilt position.

For increased safety, a redundant mechanical stay arm will be provided that must be manually put in place on the left side between the chassis and cab frame when the cab is in the raised position. This device will be manually stowed to its original position before the cab can be lowered.

Cab Lift Interlock

The cab lift system will be interlocked to the parking brake. The cab tilt mechanism will be active only when the parking brake is set and the ignition switch is in the on position. If the parking brake is released, the cab tilt mechanism will be disabled.

GRILLE

A bright finished aluminum mesh grille screen, inserted behind a bright finished grille surround, will be provided on the front center of the cab.

DOOR JAMB SCUFFPLATES

All cab door jambs will be furnished with a 1.00" brushed stainless steel scuffplate, mounted on the striker side of the jamb.

MIRRORS

A Retrac, Model 613423, dual vision, motorized, west coast style mirror, with chrome finish, will be mounted on each side of the front cab door with spring loaded retractable arms. The flat glass and convex glass will be heated and adjustable with remote control within reach of the driver.

DOORS

To enhance entry and egress to the cab, the forward cab doors will be a minimum of 37.50" wide x 75.50" high. The crew cab doors will be located on the sides of the cab and will be constructed in the same manner as the forward cab doors. The crew cab door openings will be a minimum of 34.30" wide x 75.50" high.

The forward cab and crew cab doors will be constructed of extruded aluminum with a nominal material thickness of 0.093". The exterior door skins will be constructed from 0.090" aluminum.

A customized, vertical, pull-down type door handle will be provided on the exterior of each cab door. The finish of the door handle will be chrome/black. The exterior handle will be designed specifically for the fire service to prevent accidental activation, and will provide 4.00" wide x 2.00" deep hand clearance for ease of use with heavy gloved hands.

Each door will also be provided with an interior flush, open style paddle handle that will be readily operable from fore and aft positions, and be designed to prevent accidental activation. The interior handles will provide 4.00" wide x 1.25" deep hand clearance for ease of use with heavy gloved hands.

The cab doors will be provided with both interior (rotary knob) and exterior (keyed) locks exceeding FMVSS standards. The keys will be Model 751. The locks will be capable of activating when the doors are open or closed. The doors will remain locked if locks are activated when the doors are opened, then closed.

A full length, heavy duty, stainless steel, piano-type hinge with a 0.38" pin and 11 gauge leaf will be provided on all cab doors. There will be double automotive-type rubber seals around the perimeter of the door framing and door edges to ensure a weather-tight fit.

A chrome grab handle will be provided on the inside of each cab door for ease of entry.

A red webbed grab handle will be installed on the crew cab door stop strap. The grab handles will be securely mounted.

The cab steps at each cab door location will be located inside the cab doors to protect the steps from weather elements.

Door Panels
The inner cab door panels will be constructed out of brushed stainless steel.

ELECTRIC OPERATED CAB DOOR WINDOWS
All four (4) cab doors will be equipped with electric operated windows with one (1) flush mounted automotive style switch on each door. The driver's door will have four (4) switches, one (1) to control each door window.

Each switch will allow intermittent or auto down operation for ease of use. Auto down operation will be actuated by holding the window down switch for approximately 1 second.

CAB STEPS
The forward cab and crew cab access steps will be a full size two (2) step design to provide largest possible stepping surfaces for safe ingress and egress. The bottom steps will be designed with a grip pattern punched into bright aluminum treadplate material to provide support, slip resistance, and drainage. The bottom steps will be a bolt-in design to minimize repair costs should they need to be replaced. The forward cab steps will be a minimum 25.00" wide, and the crew cab steps will be 21.65" wide with an 8.00" minimum depth. The inside cab steps will not exceed 16.50" in height.

The vertical surfaces of the step well will be aluminum treadplate.

CAB EXTERIOR HANDRAILS
A 1.25" diameter slip-resistant, knurled aluminum handrail will be provided adjacent to each cab and crew cab door opening to assist during cab ingress and egress.

STIRRUP STEPS
Hinged, swing style stirrup steps will be provided below each cab and crew cab door.

The stirrup step will be lit by the perimeter 12 volt DC LED light provided on the step.

The step light will be activated automatically when the battery switch is on and the exit doors are opened or by the same means as the body step lights.

STEP LIGHTS
There will be six (6) white LED step lights with chrome housing installed for cab and crew cab access steps.

- One (1) light for the left side cab access steps.
- Two (2) lights for the left side crew cab access steps.
- Two (2) lights for the right side crew cab access steps.

- One (1) light for the right side cab access step.

In order to ensure exceptional illumination, each light will provide a minimum of 25 foot-candles (fc) covering an entire 15" x 15" square placed ten (10) inches below the light and a minimum of 1.5 fc covering an entire 30" x 30" square at the same ten (10) inch distance below the light.

The lights will be activated when the battery switch is on and the adjacent door is opened.

FENDER CROWNS
Stainless steel fender crowns will be installed at the cab wheel openings.

CREW CAB WINDOWS
One (1) fixed window with tinted glass will be provided on each side of the cab, to the rear of the front cab door. The windows will be sized to enhance light penetration into the cab interior. The windows will measure 18.70" wide x 23.75" high with chrome window trim.

BEHIND RIGHT SIDE CAB DOOR WINDOW TINT
The window behind the right side front cab door will be tinted privacy dark gray.

BEHIND LEFT SIDE CAB DOOR WINDOW TINT
The window behind the left side front cab door will be tinted privacy dark gray.

LEFT SIDE ROLLUP CREW CAB DOOR WINDOW TINT
The rollup window in the left side crew cab door will be tinted privacy dark gray.

RIGHT SIDE ROLLUP CREW CAB DOOR WINDOW TINT
The rollup window in the right side crew cab door will be tinted privacy dark gray.

STORAGE COMPARTMENT
Provided under the forward facing crew cab seats will be a transverse compartment. The compartment will be divided into upper and lower sections by a removable divider located at the cab floor.

The upper section will be 16.25" wide x 9.00" high x full width (transverse) of the crew cab. The lower section will be 16.50" wide x 25.50" high x 15.00" deep on both sides. The compartment will extend from the bottom of the cab to top of the seat riser.

There will be two (2) double pan doors painted to match the cab exterior with a locking D-Ring latch with #751 key, one (1) on each side of the cab with a web strap for each exterior door provided as a door stop. The clear door opening of each compartment door will be 10.25" wide x 32.00" high.

The exterior access will be provided with a brushed stainless steel scuffplate on the lower door frame.

There will be one (1) drop down door, painted to match the cab interior with two (2) non-locking flush lift and turn latches with no louvers on the forward face of the seat riser.

The exterior of the compartment will be painted to match the cab interior color. The interior of the compartment will be painted to match the cab interior.

Compartment Light
There will be four (4) white LED strip lights, one (1) horizontally mounted in each lower and upper exterior compartment. The lights will be controlled by an automatic door switch.

ARM REST ON SIDE OF ENGINE TUNNEL
There will be two (2) padded arm rest(s) provided on the side of the engine tunnel, one on the driver side and one on the officer side. Each arm rest will be provided on a triangular shaped enclosed bracket that is painted to match the cab interior color. The padding will be located on the top of the bracket only to act as a horizontal arm rest. The arm rest padding will be 4.00" wide x 1.50" thick x 18.00" long and match the seat upholstery. There will be recessed pocket(s) provided in the arm rest bracket located to be determined to flush mount the following components: to be determined .

STORAGE COMPARTMENT
Provided on the officer's side of the cab, in the step area, will be a storage compartment. The compartment will be 11.50" wide x 9.50" high x 11.50" deep. The compartment will have a drop down hinged treadplate door with a D-ring handle. The compartment will be D/A finished.

RECESSED POCKET WITH ELASTIC COVER
To provide organized storage (clutter control) in the cab for miscellaneous equipment, the cab interior will be provided with recessed storage pockets. The pockets will be approximately 6.00" wide x 2.12" high and will be constructed of aluminum. The pockets will be provided with a perforated elastic material cover to secure the equipment in the pocket. There will be two (2) pockets installed switch panels 3 and 4. Pockets will only be installed in overhead locations where there is available depth behind the panel.

PIKE POLE STORAGE
There will be two (2) set(s) of holders for mounting of pike pole(s). Each set will include a mounting bracket and cup holder. The holders will be mounted vertically on the rear cab wall, one (1) each side, outboard of the tele scene light poles. The pole will be held in place with a Hooklok, P/N 1001, mounting bracket. The base of the pole will be located in a round cup holder.

CUP HOLDER
There will be three (3) cup holder(s) provided. Each cup holder will be 4.00" in diameter x 4.00" high. An approximate 1.00" wide recess in the cup holder will allow it to hold beverage containers with handles.

Black rubber matting will be provided on the bottom of each cup holder.

The cup holder(s) will be painted to match the cab interior and located to be determined at the final inspection.

GLOVE BOX
A glove box with a drop-down door will be installed above the recessed area of the dash panel in front of the officer's position. The glove box will be 31.00" wide at the top and 24.75" at the bottom x 5.50" high x 6.25" deep. The clear door opening will be 14.25" wide x 3.95" high.

CAB DASH

The driver side dash, switch panel located to the right of the driver, and center console will be constructed of metal and painted to match the cab interior.

The officer side dash will be a flat top design with an upper beveled edge to provide easy maintenance and will be constructed out of aluminum and painted to match the cab interior.

The instrument gauge cluster will be surrounded with a high impact ABS plastic contoured to the same shape of the instrument gauge cluster.

COAT HOOK

There will be three (3) coat hook(s) supplied and installed to be determined at the final inspection. These hooks will be for coat storage only.

The hook(s) will be sprayed with black UL-LX® polyurethane/polyurea elastomer abrasive resistant material.

EQUIPMENT MOUNTING SHELF

There will be one (1) shelf for permanent mounting of equipment provided.

The shelf will be located above the right side rear facing seat riser.

Each shelf will be as wide and long as possible. The shelf will be supported by cross bracing to keep the area under the shelf open. The shelf will be installed from the front edge of the air tunnel on the passenger's side to the front edge of the crew cab door opening..

Each shelf will have a 4.00" lip around edge.

On the front inboard side of the shelf, in front of the engine tunnel, will be a cup holder. The cup holder will match the height of the shelf.

The shelf will be fabricated from aluminum and will be painted to match the cab interior.

Shelving not intended for storage of loose equipment. Items stored on each shelf will be permanently attached to meet current edition of applicable NFPA standards.

CAB INTERIOR

The cab interior will be constructed of primarily metal (painted aluminum) to withstand the severe duty cycles of the fire service.

The engine tunnel will be padded and covered, on the top and sides, with dark silver gray 36 ounce leather grain vinyl resistant to oil, grease, and mildew.

To provide a deluxe automotive interior the side walls and rear wall will be covered by a leather grain vinyl that is resistant to oil, grease, and mildew.

The headliner will be installed in both forward and rear cab sections. Headliner material will be vinyl. A sound barrier will be part of its composition. Material will be installed on aluminum sheet and securely fastened to interior cab ceiling.

Forward portion of cab headliner will permit easy access for service of electrical wiring or other maintenance needs.

All wiring will be placed in metal raceways.

CAB INTERIOR UPHOLSTERY

The cab interior upholstery will be 36 oz dark silver gray vinyl.

CAB INTERIOR PAINT

The cab interior metal surfaces, excluding the rear heater panels, will be painted fire smoke gray, vinyl texture paint.

The rear heater panels will be painted black, vinyl textured paint.

CAB FLOOR

The cab and crew cab floor areas will be covered with Polydamp™ acoustical floor mat consisting of a black pyramid rubber facing and closed cell foam decoupler.

The top surface of the material has a series of raised pyramid shapes evenly spaced, which offer a superior grip surface. Additionally, the material has a 0.25" thick closed cell foam (no water absorption) which offers a sound dampening material for reducing sound levels.

DEFROST/AIR CONDITIONING SYSTEM

A ceiling mounted combination heater, defroster and air conditioning system will be installed in the cab above the engine tunnel area.

Cab Defroster

A 54,000 BTU heater-defroster unit with 690 SCFM of air flow will be provided inside the cab. The heater-defrost will be installed in the forward portion of the cab ceiling. Air outlets will be strategically located in the cab header extrusion per the following:

- One (1) adjustable outlet directed towards the left side cab window.
- One (1) adjustable outlet directed towards the right side cab window.
- Six (6) fixed outlets directed at the windshield.

The defroster will be capable of clearing 98 percent of the windshield and side glass when tested under conditions where the cab has been cold soaked at 0 degrees Fahrenheit for 10 hours, and a 2 ounce per square inch layer of frost/ice has been able to build up on the exterior windshield. The defroster system will meet or exceed SAE J382 requirements.

Cab/Crew Auxiliary Heater

There will be one (1) 31,000 BTU auxiliary heater with 560 SCFM of air flow provided in each outboard rear facing seat riser with a dual scroll blower. An aluminum plenum incorporated into the cab structure to be used to transfer heat to the forward positions.

Air Conditioning

A 19.10 cubic inch compressor will be installed on the engine.

A roof-mounted condenser with a 78,000 BTU output at 2,400 SCFM that meets and exceeds the performance specification will be installed on the cab roof. The condenser cover to be painted to match the cab roof.

The air conditioning system will be capable of cooling the average cab temperature from 100 degrees Fahrenheit to 75 degrees Fahrenheit at 50 percent relative humidity within 30 minutes. The cooling performance test will be run only after the cab has been heat soaked at 100 degrees Fahrenheit for a minimum of 4 hours.

The evaporator unit will be installed in the rear portion of the cab ceiling over the engine tunnel. The evaporator will include one (1) high performance heating core, one (1) high performance cooling core with (1) plenum directed to the front and one (1) plenum directed to the rear of the cab. The rear plenum will be covered with a metal cover painted to match the cab interior.

The evaporator unit will have a 52,000 BTU at 690 SCFM rating that meets and exceeds the performance specifications.

Adjustable air outlets will be strategically located on the forward plenum cover per the following:

- Four (4) outlets directed towards the seating position on the left side of the cab.
- Four (4) outlets directed towards the seating position on the right side of the cab.

Adjustable air outlets will be strategically located on the evaporator cover per the following:

- Minimum of five (5) outlets directed towards crew cab area.

A high efficiency particulate air (HEPA) filter will be included for the system. Access to the filter cover will be hinged with two (2) thumb latches.

The air conditioner refrigerant will be R-134A and will be installed by a certified technician.

Climate Control

An automotive style controller will be provided to control the heat and air conditioning system within the cab. The controller will have three (3) functional knobs for fan speed, temperature, and air flow distribution (front to rear) control.

The system will control the temperature of the cab and crew cab automatically by pushing the center of the fan speed control knob. Rotate the center temperature control knob to set the cab and crew cab temperature.

The AC system will be manually activated by pushing the center of the temperature control knob. Pushing the center of the air flow distribution knob will engage the AC for max defrost, setting the fan speeds to 100 percent and directing all air flow to the overhead forward position.

The system controller will be located within panel position #13.

Gravity Drain Tubes
Two (2) condensate drain tubes will be provided for the air conditioning evaporator. The drip pan will have two (2) drain tubes plumbed separately to allow for the condensate to exit the drip pan. No pumps will be provided.

SUN VISORS
There will be two (2) vinyl covered sun visors provided. The sun visors will be located above the windshield with one (1) mounted on each side of the cab.

There will be a black plastic thumb latch provided to help secure each sun visor in the stowed position.

GRAB HANDLE
A black rubber covered grab handle will be mounted on the door post of the driver and officer's side cab door to assist in entering the cab. The officer's side grab handle will be mounted on the lower portion of the door post. The grab handle will be securely mounted to the post area between the door and windshield.

ENGINE COMPARTMENT LIGHTS
There will be one (1) Whelen, Model 3SC0CDCR, 12 volt DC, 3.00" white LED light(s) with Whelen, Model 3FLANGEC, chrome flange kit(s) installed under the cab to be used as engine compartment illumination.

These light(s) will be activated automatically when the cab is raised.

ACCESS TO ENGINE DIPSTICKS
For access to the engine oil and transmission fluid dipsticks, there will be a door on the engine tunnel, inside the crew cab. The door will be on the rear wall of the engine tunnel, on the vertical surface.

The engine oil dipstick will allow for checking only. The transmission dipstick will allow for both checking and filling.

The door will have a rubber seal for thermal and acoustic insulation. One (1) flush lift and turn latch will be provided on the access door.

SEATING CAPACITY
The seating capacity of the vehicle (including tiller cab and belted seat positions in the rescue body) will be five (5).

DRIVER SEAT

A USSC Valor Magnus air suspension R-back seat will be provided in the cab for the driver. For increased convenience, the seat will include a manual control to adjust the horizontal position and 2.00" of vertical travel. To provide flexibility for multiple driver configurations, the seat will have a reclining back, adjustable from 15 degrees back to 45 degrees forward.

The seat will be furnished with a 3-point, shoulder type seat belt.

There will be no additional contaminant mitigation vinyl covers shipped loose with the seat.

OFFICER SEAT

A USSC, P1A, air suspension seat will be provided in the cab for the officer. For optimal comfort, the seat will be provided with a 20.00" wide x 18.00" deep cushion. For increased convenience, the seat will include a manual control to adjust the height (3.00" travel) and horizontal position (2.50" travel). The seat will have a reclining, R-back style seat back.

The seat will be furnished with a 3-point, shoulder type seat belt.

There will be no additional contaminant mitigation vinyl covers shipped loose with the seat.

REAR FACING DRIVER SIDE OUTBOARD SEAT

There will be one (1) rear facing seat provided at the driver side outboard position in the crew cab. The seat back will be a high back style with 9 degree fixed recline angle. For optimal comfort, the seat will be provided with 17.00" deep foam cushions designed with EVC (elastomeric vibration control).

The seat will be furnished with a 3-point, shoulder type seat belt.

FORWARD FACING CENTER SEATS

There will be two (2) forward facing, USSC Valor, seats provided at the center position in the crew cab. The seat backs will be a R-back style with an adjustable recline angle. For optimal comfort, the seats will be provided with 17.00" deep cushions.

The seats will be spaced an additional 11.00" apart from standard to provide more room for each occupant.

Armrests will be provided on each side of the seat backs for both seats.

The seats will be furnished with a 3-point, shoulder type seat belt.

SEAT UPHOLSTERY

The seat upholstery will be leather grain 36 oz black vinyl for the Seats Inc. seating positions and black for the USSC seating positions. The vinyl will be resistant to oil, grease and mildew. The cab and tiller cab (if applicable) will have five (5) seating positions.

ACCESS DOORS

Access will be provided in the front edge of each rear facing seat riser. Each access panel will be provided with louvers for ventilation and painted to match the cab interior.

Both panels will be secured with screws and be removable.

SEAT BELTS

All cab and tiller cab (if applicable) seating positions will have red seat belts. To provide quick, easy use for occupants wearing bunker gear, the female buckle and seat belt webbing length will meet or exceed the current edition of applicable NFPA and CAN/ULC - S515 standards.

The 3-point shoulder type seat belts will include height adjustment. This adjustment will optimize the belts effectiveness and comfort for the seated firefighter. The 3-point shoulder type seat belts will be furnished with dual automatic retractors that will provide ease of operation in the normal seating position.

The 3-point shoulder type belts will also include the ReadyReach® D-loop assembly to the shoulder belt system. The ReadyReach feature adds an extender arm to the D-loop location placing the D-loop in a closer, easier to reach location.

Any flip up seats will include a 3-point shoulder type belts only.

To ensure safe operation, the seats will be equipped with seat belt sensors in the seat cushion and belt receptacle that will activate an alarm indicating a seat is occupied but not buckled.

HELMET STORAGE PROVIDED BY FIRE DEPARTMENT

NFPA 1900, 2024 edition, section 11.1.8.4.1 and CAN/ULC 515:2024 edition, section 5.2, requires a location for helmet storage be provided.

There is no helmet storage on the apparatus as manufactured. The fire department will provide a location for storage of helmets.

CAB DOME LIGHTS

There will be four (4) Whelen, Model 60C*EGCS, 6.00" round dual LED dome lights provided. Two (2) lights will be mounted above the inside shoulder of the driver and officer and two (2) lights will be installed and located, one (1) on each side of the crew cab.

The color of the LED's will be red and white.

The white LED's will be controlled by the lens switch and the door switch to activate the white LEDs adjacent to the respective door.

The color LED's will be controlled by the lens switch.

PORTABLE HAND LIGHTS PROVIDED BY FIRE DEPARTMENT

The hand lights are not on the apparatus as manufactured. The fire department will provide and mount these hand lights.

HAND HELD LIGHT

There will be Streamlight, Model UltraStinger™ lights provided. Each light will include an AC/DC charger. There will be four (4) lights provided.

The flashlights will be mounted to match previous job 35099.

CAB INSTRUMENTATION

The cab instrument panel will include gauges, an LCD display, telltale indicator lamps, control switches, alarms, and a diagnostic panel. The function of the instrument panel controls and switches will be identified by a label adjacent to each item. Actuation of the headlight switch will illuminate the labels in low light conditions. Telltale indicator lamps will not be illuminated unless necessary. The cab instruments and controls will be conveniently located within the forward cab section, forward of the driver. The gauge assembly and switch panels are designed to be removable for ease of service and low cost of ownership.

Gauges

The gauge panel will include the following ten (10) ivory faced gauges with chrome bezels to monitor vehicle performance:

- Voltmeter gauge (volts):
  - Low volts (11.8 VDC)
    - Amber caution indicator on the information center with intermittent alarm
    - Amber caution light on gauge assembly
  - High volts (15.5 VDC)
    - Amber caution indicator on the information center with intermittent alarm
    - Amber caution light on gauge assembly
  - Very low volts (11.3 VDC)
    - Red warning indicator on the information center with a steady alarm
    - Amber caution light on gauge assembly
  - Very high volts (16.0 VDC)
    - Red warning indicator on the information center with a steady alarm
    - Amber caution light on gauge assembly
- Engine Tachometer (RPM)
- Speedometer MPH (Major Scale), KM/H (Minor Scale)
- Fuel level gauge (Empty - Full in fractions):
  - Low fuel (1/8 full)
    - Amber caution indicator on the information center with intermittent alarm
    - Amber caution light on gauge assembly
  - Very low fuel (1/32 full)
    - Red caution indicator on the information center with steady alarm
    - Amber caution light on gauge assembly
- Engine Oil pressure Gauge (PSI):
  - Low oil pressure to activate engine warning lights and alarms
    - Red caution indicator on the information center with steady alarm

        - Amber caution light on gauge assembly
- Front Air Pressure Gauges (PSI):
    - Low air pressure to activate warning lights and alarm
        - Red warning indicator on the information center with a steady alarm
        - Amber caution light on gauge assembly
- Rear Air Pressure Gauges (PSI):
    - Low air pressure to activate warning lights and alarm
        - Red warning indicator on the information center with a steady alarm
        - Amber caution light on gauge assembly
- Transmission Oil Temperature Gauge (Fahrenheit):
    - High transmission oil temperature activates warning lights and alarm
        - Amber caution indicator on the information center with intermittent alarm
        - Amber caution light on gauge assembly
- Engine Coolant Temperature Gauge (Fahrenheit):
    - High engine temperature activates an engine warning light and alarms
        - Amber caution indicator on the information center with intermittent alarm
        - Amber caution light on gauge assembly
- Diesel Exhaust Fluid Level Gauge (Empty - Full in fractions):
    - Low fluid (1/8 full)
        - Amber indicator light in gauge dial

All gauges will perform prove out at initial power-up to ensure proper performance.

Indicator Lamps

To promote safety, the following telltale indicator lamps will be located on the instrument panel in clear view of the driver. The indicator lamps will be "dead-front" design that is only visible when active. The colored indicator lights will have descriptive text or symbols.

The following amber telltale lamps will be present:

- Low coolant
- Trac cntl (traction control) (where applicable
- Check engine
- Check trans (check transmission
- Aux brake overheat (Auxiliary brake overheat
- Air rest (air restriction)
- Caution (triangle symbol)
- Water in fuel
- DPF (engine diesel particulate filter regeneration)
- Trailer ABS (where applicable)
- Wait to start (where applicable)
- HET (engine high exhaust temperature) (where applicable)
- ABS (antilock brake system)

- MIL (engine emissions system malfunction indicator lamp) (where applicable)
- Side roll fault (where applicable)
- Front air bag fault (where applicable)

The following red telltale lamps will be present:

- Warning (stop sign symbol)
- Seat belt
- Parking brake
- Stop engine
- Rack down

The following green telltale lamps will be provided:

- Left turn
- Right turn
- Battery on

The following blue telltale lamp will be provided:

- High beam

Alarms
Audible steady tone warning alarm: A steady audible tone alarm will be provided whenever a warning message is present.

Audible pulsing tone caution alarm: A pulsing audible tone alarm (chime/chirp) will be provided whenever a caution message is present without a warning message being present.

Alarm silence: Any active audible alarm will be able to be silenced by holding the ignition switch at the top position for three (3) to five (5) seconds. For improved safety, silenced audible alarms will intermittently chirp every 30 seconds until the alarm condition no longer exists. The intermittent chirp will act as a reminder to the operator that a caution or warning condition still exists. Any new warning or caution condition will enable the steady or pulsing tones respectively.

Indicator Lamp and Alarm Prove-Out
A system will be provided which automatically tests telltale indicator lights and alarms located on the cab instrument panel. Telltale indicators and alarms will perform prove-out at initial power-up to ensure proper performance.

Control Switches
For ease of use, the following controls will be provided immediately adjacent to the cab instrument panel within easy reach of the driver. All switches will have backlit labels for low light applications.

Headlight/Parking light switch: A three (3)-position maintained rocker switch will be provided. The first switch position will deactivate all parking and headlights. The second switch position will activate the parking lights. The third switch will activate the headlights.

Panel back lighting intensity control switch: A three (3)-position momentary rocker switch will be provided. Pressing the top half of the switch, "Panel Up" increases the panel back lighting intensity and pressing the bottom half of the switch, "Panel Down" decreases the panel back lighting intensity. Pressing the half or bottom half of the switch several times will allow back lighting intensity to be gradually varied from minimum to maximum intensity level for ease of use.

Ignition switch: A three (3)-position maintained/momentary rocker switch will be provided. The first switch position will turn off and deactivate vehicle ignition. The second switch position will activate vehicle ignition and will perform prove-out on the telltale indicators and alarms for 3 to 5 seconds after the switch is turned on. A green indicator lamp is activated with vehicle ignition. The third momentary position will temporarily silence all active cab alarms. An alarm "chirp" may continue as long as alarm condition exists. Switching ignition to off position will terminate the alarm silence feature and reset function of cab alarm system.

Engine start switch: A two (2)-position momentary rocker switch will be provided. The first switch position is the default switch position. The second switch position will activate the vehicle's engine. The switch actuator is designed to prevent accidental activation.

Hazard switch will be provided on the instrument panel or on the steering column.

Heater, defroster, and air conditioning control panel.

Windshield wiper control will include low, high and intermittent modes.

Turn signal arm: A self-canceling turn signal with high beam headlight will be provided.

Parking brake control: An air actuated push/pull park brake control valve will be provided.

Chassis horn control: Activation of the chassis horn control will be provided through the center of the steering wheel.

High idle engagement switch: A momentary rocker switch with integral indicator lamp will be provided. The switch will activate and deactivate the high idle function. The "OK To Engage High Idle" indicator lamp must be active for the high idle function to engage. A green indicator lamp integral to the high idle engagement switch will indicate when the high idle function is engaged.

"OK To Engage High Idle" indicator lamp: A green indicator light will be provided next to the high idle activation switch to indicate that the interlocks have been met to allow high idle engagement.

Emergency switching will be controlled by multiple individual warning light switches for various groups or areas of emergency warning lights. An Emergency Master switch provided on the instrument panel that enables or disables all individual warning light switches is included.

An additional "Emergency Master" button will be provided on the lower left hand corner of the gauge panel to allow convenient control of the "Emergency Master" system from inside the driver's door when standing on the ground.

Custom Switch Panels

The design of cab instrumentation will allow for emergency lighting and other switches to be placed within easy reach of the operator thus improving safety. There will be positions for up to four (4) switch panels in the lower instrument console and up to six (6) switch panels in the overhead visor console. All switches have backlit labels for low light conditions.

Diagnostic Panel

A diagnostic panel will be accessible while standing on the ground and located inside the driver's side door left of the steering column. The diagnostic panel will allow diagnostic tools such as computers to connect to various vehicle systems for improved troubleshooting providing a lower cost of ownership. Diagnostic switches will allow ABS systems to provide blink codes should a problem exist.

The diagnostic panel will include the following:

- Engine diagnostic port
- Transmission diagnostic port
- ABS diagnostic port
- Roll sensor diagnostic port
- Command Zone USB diagnostic port
- ABS diagnostic switch (blink codes flashed on ABS telltale indicator)
- Diesel particulate filter regeneration switch (where applicable)
- Diesel particulate filter regeneration inhibit switch (where applicable)

Cab LCD Display

A digital four (4)-row by 20-character dot matrix display will be integral to the gauge panel. The display will be capable of showing simple graphical images as well as text. The display will be split into three (3) sections. Each section will have a dedicated function. The upper left section will display the outside ambient temperature.

The upper right section will display the following, along with other configuration specific information:

- Odometer
- Trip mileage
- PTO hours
- Fuel consumption
- Engine hours

The bottom section will display INFO, CAUTION, and WARNING messages. Text messages will automatically activate to describe the cause of an audible caution or warning alarm. The LCD will be capable of displaying multiple text messages should more than one caution or warning condition exist.

AIR RESTRICTION INDICATOR

A high air restriction warning indicator light LCD message with amber warning indicator and audible alarm will be provided.

"DO NOT MOVE APPARATUS" INDICATOR

A flashing red indicator light, located in the driving compartment, will be illuminated automatically per the current NFPA requirements. The light will be labeled "Do Not Move Apparatus If Light Is On."

The same circuit that activates the Do Not Move Apparatus indicator will activate a pulsing alarm when the parking brake is released.

DO NOT MOVE TRUCK MESSAGES

Messages will be displayed on the Command Zone™, color display located within sight of the driver whenever the Do Not Move Truck light is active. The messages will designate the item or items not in the stowed for vehicle travel position (parking brake disengaged).

The following messages will be displayed (where applicable):

- Do Not Move Truck
- DS Cab Door Open (Driver Side Cab Door Open)
- PS Cab Door Open (Passenger's Side Cab Door Open)
- DS Crew Cab Door Open (Driver Side Crew Cab Door Open)
- PS Crew Cab Door Open (Passenger's Side Crew Cab Door Open)
- DS Body Door Open (Driver Side Body Door Open)
- PS Body Door Open (Passenger's Side Body Door Open)
- Rear Body Door Open
- DS Ladder Rack Down (Driver Side Ladder Rack Down)
- PS Ladder Rack Down (Passenger Side Ladder Rack Down)
- Deck Gun Not Stowed
- Lt Tower Not Stowed (Light Tower Not Stowed)
- Fold Tank Not Stowed (Fold-A-Tank Not Stowed)
- Aerial Not Stowed (Aerial Device Not Stowed)
- Stabilizer Not Stowed
- Steps Not Stowed
- Handrail Not Stowed

Any other device that is opened, extended, or deployed that creates a hazard or is likely to cause major damage to the apparatus if the apparatus is moved will be displayed as a caution message after the parking brake is disengaged.

SWITCH PANELS

The built-in switch panels will be located in the lower console or overhead console of the cab.

The switches will be rocker-type and include an integral indicator light. For quick, visual indication the switch will be illuminated whenever the switch is active. A 2-ply, scratch resistant laser engraved Gravoply label indicating the use of each switch will be placed below the switches. The label will allow light to pass through the letters for improved visibility in low light conditions. Switches and light source are integral to the switch panel assembly.

WIPER CONTROL

For simple operation and easy reach, the windshield wiper control will be an integral part of the directional light lever located on the steering column. The wiper control will include high and low wiper speed settings, an intermittent wiper control and windshield washer switch. The control will have a "return to park" provision, which allows the wipers to return to the stored position when not in use.

CAB USB

There will be four (4) USB terminations with a combination USB type A & C, wired to switched battery power, provided per the following:

- One (1) within reach of the driver
- One (1) within reach of the passenger
- Two (2) on the rear of the engine tunnel, one (1) each side.

This circuit may be load managed.

SPARE CIRCUIT

There will be two (2) pair of wires, including a positive and a negative, installed on the apparatus.

The wires will have the following features:

The positive wire will be connected directly to the battery switched power.

The negative wire will be connected to ground.

Wires will be capable of carrying 30 amps.

Power and ground will terminate one behind the driver seat and one behind the officer seat, each with the fuse block facing rearward.

Termination will be to a Blue Sea System, Model 5026, 12 circuit with negative bus bar. The terminal block will include a cover with circuit labels.

Wires will be protected to meet the NFPA Automotive Fire Apparatus standard.

This circuit(s) may be load managed when the parking brake is set.

SPARE CIRCUIT

There will be one (1) pair of wires, including a positive and a negative, installed on the apparatus.

The wires will have the following features:

- The positive wire will be connected directly to the battery power.
- The negative wire will be connected to ground.
- Wires will be capable of carrying 20 amps.
- Power and ground will terminate officer side dash area.
- Termination will be with heat shrinkable butt splicing.
- Wires will be protected to meet the NFPA Automotive Fire Apparatus standard.

Battery direct loads cannot be Load Managed.

SPARE CIRCUIT
There will be one (1) pair of wires, including a positive and a negative, installed on the apparatus.

The wires will have the following features:

- The positive wire will be connected directly to the battery power.
- The negative wire will be connected to ground.
- Wires will be capable of carrying 20 amps.
- Power and ground will terminate compartment RS5, rear wall, upper right corner, next to the right side wall.
- Termination will be to a Blue Sea System, Model 5025, 6 circuit with negative bus bar. The terminal block will include a cover with circuit labels.

Wires will be protected to meet the NFPA Automotive Fire Apparatus standard.

Battery direct loads cannot be Load Managed

SPARE CIRCUIT
There will be two (2) pair of wires, including a positive and a negative, installed on the apparatus.

The wires will have the following features:

- The positive wire will be connected directly to the battery switched power.
- The negative wire will be connected to ground.
- Wires will be capable of carrying 15 amps.
- Power and ground will terminate one (1) on the driver side dash (far left side from LOC#9 panel) and one on the officers side dash.
- Termination will be with 15 amp, power point plug with rubber cover.
- Wires will be protected to meet the NFPA Automotive Fire Apparatus standard.

The circuit(s) may be load managed when the parking brake is set.

INSTRUMENT PANEL LAYOUT
The instrument panel layout will match the customers previous unit 38133 as close as possible.

RADIO WITH CD PLAYER
There will be one (1) Alpine UTE-73BT, Digital Media Receiver installed per switch panel layout.

The receiver will include;

- digital media receiver with AM/FM tuner (does not play CDs)
- built-in MOSFET amplifier (18 watts RMS CEA-2006/50 peak x 4 channels)
- variable color illumination
- built-in Bluetooth for hands-free calls and music streaming
- variable color display
- plays MP3, WMA, and FLAC music files through USB
- compatible with iPod, iPhone, and Android
- Alpine TuneIt App allows for extensive sound adjustment
- App Mode for metadata display and basic control of select music apps

There will be one (1) Alpine KTP-445, 45 watts RMSx2 to 4ohm Power Pack mounted in Loc #4 If amp can be located next to radio, please proceed with this recommended location.

There will be four (4) Polk DB652, 6-1/2" 2-way speakers with spacers, mounted in the ceiling headliner, one (1) behind the driver seat, one (1) behind the officer seat and two (2) in the crew cab area; each outboard of the forward facing seats.

There will be a roof-mounted rubber antenna located in an open space, on the cab roof.

INFORMATION CENTER

An information center employing a 7.00" diagonal touch screen color LCD display will be encased in an ABS plastic housing.

The information center will have the following specifications:

- Operate in temperatures from -40 to 158 degrees Fahrenheit
- LCD optically bonded to hardened AR glass lens
- Five weather resistant user interface switches
- Grey with black accents
- Sunlight Readable
- Linux operating system
- Minimum of 1000nits rated display
- Display can be changed to an available foreign language
- A LCD display integral to the cab gauge panel will be included as outlined in the cab instrumentation area.
- Programmed to read US Customary

General Screen Design

Where possible, background colors will be used to provide "At a Glance" vehicle information. If information provided on a screen is within acceptable limits, a green background will be used.

If a caution or warning situation arises the following will occur:

- An amber background/text color will indicate a caution condition
- A red background/text color will indicate a warning condition
- The information center will utilize an "Alert Center" to display text messages for audible alarm tones. The text messages will be written to identify the item(s) causing the audible alarm to sound. If more than one (1) text message occurs, the messages will cycle every second until the problem(s) have been resolved. The background color for the "Alert Center" will change to indicate the severity of the "warning" message. If a warning and a caution condition occur simultaneously, the red background color will be shown for all alert center messages.
- A label for each button will exist. The label will indicate the function for each active button for each screen. Buttons that are not utilized on specific screens will have a button label with no text or symbol.

Home/Transit Screen
This screen will display the following:

- Vehicle Mitigation (if equipped)
- Water Level (if the water level system includes compatible communications to the information center)
- Foam Level (if the foam level system includes compatible communications to the information center)
- Seat Belt Monitoring Screen
- Tire Pressure Monitoring (if equipped)
- Digital Speedometer
- Active Alarms

On Scene Screen
This screen will display the following and will be auto activated with pump engaged (if equipped):

- Battery Voltage
- Fuel
- Oil Pressure
- Coolant Temperature
- RPM
- Water Level (if equipped)
- Foam Level (if equipped)
- Foam Concentration (if equipped)
- Water Flow Rate (if equipped)
- Water Used (if equipped)
- Active Alarms

Virtual Buttons
There will be four (4) virtual switch panel screens that match the overhead and lower lighting and HVAC switch panels.

Page Screen

The page screen will display the following and allow the user to progress into other screens for further functionality:

- Diagnostics
  - Faults
    - Listed by order of occurrence
    - Allows to sort by system
  - Interlock
    - Throttle Interlocks
    - Pump Interlocks (if equipped)
    - Aerial Interlocks (if equipped)
    - PTO Interlocks (if equipped)
  - Load Manager
    - A list of items to be load managed will be provided. The list will provide a description of the load.
    - The lower the priority numbers the earlier the device will be shed should a low voltage condition occur.
    - The screen will indicate if a load has been shed (disabled) or not shed.
    - "At a glance" color features are utilized on this screen.
  - Systems
    - Command Zone
      - Module type and ID number
      - Module Version
      - Input or output number
      - Circuit number connected to that input or output
      - Status of the input or output
      - Power and Constant Current module diagnostic information
    - Foam (if equipped)
    - Pressure Controller (if equipped)
    - Generator Frequency (if equipped)
  - Live Data
    - General Truck Data
- Maintenance
  - Engine oil and filter
  - Transmission oil and filter
  - Pump oil (if equipped)
  - Foam (if equipped)
  - Aerial (if equipped)
- Setup
  - Clock Setup
  - Date & Time
    - 12 or 24 hour format

        - Set time and date
    - Backlight
        - Daytime
        - Night time
        - Sensitivity
    - Unit Selection
    - Home Screen
    - Virtual Button Setup
    - On Scene Screen Setup
    - Configure Video Mode
        - Set Video Contrast
        - Set Video Color
        - Set Video Tint
- Do Not Move
    - The screen will indicate the approximate location and type of item that is open or is not stowed for travel. The actual status of the following devices will be indicated
        - Driver Side Cab Door
        - Passenger's Side Cab Door
        - Driver Side Crew Cab Door
        - Passenger's Side Crew Cab Door
        - Driver Side Body Doors
        - Passenger's Side Body Doors
        - Rear Body Door(s)
        - Ladder Rack (if applicable)
        - Deck Gun (if applicable)
        - Light Tower (if applicable)
        - Hatch Door (if applicable)
        - Stabilizers (if applicable)
        - Steps (if applicable)
- Notifications
    - View Active Alarms
        - Shows a list of all active alarms including date and time of the occurrence is shown with each alarm
        - Silence Alarms - All alarms are silenced
- Timer Screen
- HVAC (if equipped)
- Tire Information (if equipped)
- Ascendant Set Up Confirmation (if equipped)

Button functions and button labels may change with each screen.

COLLISION MITIGATION

There will be a HAAS Alert®, Model HA7 Responder-to-Vehicle (R2V) collision avoidance system provided on the apparatus. The HA7 cellular transponder module will be installed behind the cab windshield, as high and near to the center as practical, to allow clear visibility to the sky. The module dimensions are 5.40" long x 2.70" wide x 1.30" high, and operating temperature range is -40 degrees Celsius to 85 degrees Celsius.

The transponder will be connected to the vehicle's emergency master circuit and battery direct power and ground.

While responding with emergency lights on, the HA7 transponder sends alert messages via cellular network to motorists in the vicinity of the responding truck that are equipped with the WAZE app.

While on scene with emergency lights on, the HA7 transponder sends road hazard alerts to motorists in the vicinity of the truck that are equipped with the WAZE app.

The HA7 Responder-to-Vehicle (R2V) collision avoidance system will include the transponder and a 5 year cellular plan subscription.

Activation of the HAAS Alert system requires a representative of the customer to accept the End User License Agreement (EULA) via an on-line portal.

VEHICLE DATA RECORDER

There will be a vehicle data recorder (VDR) capable of reading and storing vehicle information provided.

The information stored on the VDR can be downloaded through a USB port mounted in a convenient location determined by cab model. A USB cable can be used to connect the VDR to a laptop to retrieve required information. The program to download the information from the VDR will be available to download on-line.

The vehicle data recorder will be capable of recording the following data via hardwired and/or CAN inputs:

- Vehicle Speed - MPH
- Acceleration - MPH/sec
- Deceleration - MPH/sec
- Engine Speed - RPM
- Engine Throttle Position - % of Full Throttle
- ABS Event - On/Off
- Seat Occupied Status - Yes/No by Position
- Seat Belt Buckled Status - Yes/No by Position
- Master Optical Warning Device Switch - On/Off
- Internal clock syncs the time and date when a laptop is connected

Seat Belt Monitoring System

A seat belt monitoring system (SBMS) will be provided on the Command Zone™ color display. The SBMS will be capable of monitoring up to 10 seating positions indicating the status of each seat position per the following:

- Seat Occupied & Buckled = Green LED indicator illuminated
- Seat Occupied & Unbuckled = Red LED indicator with audible alarm
- No Occupant & Buckled = Red LED indicator with audible alarm
- No Occupant & Unbuckled = No indicator and no alarm
- FAULT = Blue LED indicator illuminated

The seat belt monitoring screen will become active on the Command Zone color display when:

- The home screen is active:
    - and there is any occupant seated but not buckled or any belt buckled with an occupant.
    - and there are no other Do Not Move Apparatus conditions present. As soon as all Do Not Move Apparatus conditions are cleared, the SBMS will be activated.

The SBMS will include an audible alarm that will warn that an unbuckled occupant condition exists and the parking brake is released, or the transmission is not in park. The alarm will have a unique sound that will be different than all other alarm sounds on the vehicle. A "Seat Belt Alarm" label will be provided above this buzzer.

INTERCOM SYSTEM

A five (5) position David Clark, Model U3800, single radio interface intercom system will be provided.

The driver and officer positions will have radio interface capability with remote radio push to talk buttons located per the locations noted on the dash layout print (see job 38133 for reference) . Three (3) crew cab positions at two (2) forward facing seats and one (1) rear facing seat will have intercom only.

The following components will be supplied with this system:

- One (1) U3805 Radio Cord Junction Module
- Two (2) U3815 Radio Interface Modules (Driver, Officer)
- Two (2) Remote Push To Talk Kits
- One (1) U3800 Intercom Unit. (2 adjacent Crew)
- One (1) C3820 Power Cable
- One (1) U3801 Remote Headset Station (1 Crew)
- All necessary cables and connectors

RADIO / INTERCOM INTERFACE INCLUDED

All radio interfaced stations will have universal radio interfaces installed. The interface wiring will be routed within the cab to to the two way radio transceiver .

OVER THE HEAD HEADSET
There will be five (5) over the head headset(s) provided all seat positions.

Each David Clark, Model H3432, headset will feature:

- 5' Coiled cord
- Noise cancelling electric microphone
- Flexible microphone boom rotates 200 degrees for left or right dress
- Microphone on/off button
- Comfort Gel Earseals
- 23 dB noise reduction

HEADSET HANGERS
There will be five (5) headset hanger(s) installed driver's seat, officer's seat, driver's side inboard forward facing seat, driver's side outboard rear facing seat and passenger's side inboard forward facing seat. The hanger(s) will meet the current edition of applicable NFPA and ULC standards for equipment mounting.

BRACKET, JOHNNY RAY
There will be one (1) Johnny Ray, radio swivel bracket rated for 7 lbs. and will be provided and installed shipped loose with the vehicle.

MICROPHONE CLIP
There will be two (2) magnetic radio microphone clip kits model MMSU-1 supplied and installed to be determined at the final inspection.

RADIO ANTENNA MOUNT
There will be one (1) standard 1.125", 18 thread antenna-mounting base(s) installed rearward of the lightbar, centered (side to side and front to back) on the cab roof with high efficiency, low loss, coaxial cable(s) routed to behind the driver seat. A weatherproof cap will be installed on the mount.

VEHICLE CAMERA SYSTEM
There will be a color vehicle camera system provided with the following:

- One (1) Standard Definition (SD) camera located at the rear of the apparatus, pointing rearward, displayed automatically with the vehicle in reverse.

The camera images will be displayed on the left side vehicle information center display. Audio from the microphone on the rear camera will be emitted by an amplified speaker with volume control located on the instrument panel.

The following components will be included:

- One (1) SV-CW134639CAI Camera
- All necessary cables

Camera Switcher
A camera switcher is not required.

ELECTRICAL POWER CONTROL SYSTEM
The primary power distribution will be located forward of the officer's seating position and be easily accessible while standing on the ground for simplified maintenance and troubleshooting. Additional electrical distribution centers will be provided throughout the vehicle to house the vehicle's electrical power, circuit protection, and control components. The electrical distribution centers will be located strategically throughout the vehicle to minimize wire length. For ease of maintenance, all electrical distribution centers will be easily accessible. All distribution centers containing fuses, circuit breakers and/or relays will be easily accessible.

Distribution centers located throughout the vehicle will contain battery powered studs for supplying customer installed equipment thus providing a lower cost of ownership.

Circuit protection devices, which conform to SAE standards, will be utilized to protect electrical circuits. All circuit protection devices will be rated per NFPA requirements to prevent wire and component damage when subjected to extreme current overload. General protection circuit breakers will be Type-I automatic reset (continuously resetting). When required, automotive type fuses will be utilized to protect electronic equipment. Control relays and solenoid will have a direct current rating of 125 percent of the maximum current for which the circuit is protected per NFPA.

Solid-State Control System
A solid-state electronics based control system will be utilized to achieve advanced operation and control of the vehicle components. A fully computerized vehicle network will consist of electronic modules, electronic control modules to include black housings, a power indicator and status indicator located near their point of use to reduce harness lengths and improve reliability. The control system will comply with SAE J1939-11 recommended practices.

The control system will operate as a master-slave system whereas the main control module instructs all other system components. The system will contain patented Mission Critical software that maintains critical vehicle operations in the unlikely event of a main controller error. The system will utilize a Real Time Operating System (RTOS) fully compliant with OSEK/VDX™ specifications providing a lower cost of ownership.

For increased reliability and simplified use the control system modules will include the following attributes:

- Green LED indicator light for module power
- Red LED indicator light for network communication stability status
- Control system self test at activation and continually throughout vehicle operation
- No moving parts due to transistor logic
- Software logic control for NFPA mandated safety interlocks and indicators
- Integrated electrical system load management without additional components
- Integrated electrical load sequencing system without additional components

- Customized control software to the vehicle's configuration
- Factory and field programmable to accommodate changes to the vehicle's operating parameters

To assure long life and operation in a broad range of environmental conditions, the solid-state control system modules will meet the following specifications:

- Module circuit board will meet SAE J771 specifications
- Operating temperature from -40 degrees Celsius to +70 degrees Celsius
- Storage temperature from -40 degrees Celsius to +70 degrees Celsius
- Vibration to 50g
- IP67 rated enclosure (Totally protected against dust and also protected against the effect of temporary immersion between 15 centimeters and one (1) meter)
- Operating voltage from eight (8) volts to 32 volts DC

The main controller will activate status indicators and audible alarms designed to provide warning of problems before they become critical.

Circuit Protection and Control Diagram

Copies of all job-specific, computer network input and output (I/O) connections will be provided with each chassis. The sheets will indicate the function of each module connection point, circuit protection information (where applicable), wire numbers, wire colors and load management information.

On-Board Electrical System Diagnostics

The on-board information center will include the following diagnostic information:

- Text description of active warning or caution alarms
- Simplified warning indicators
- Amber caution indication with intermittent alarm
- Red warning indication with steady tone alarm

Advanced diagnostic feature will be provided in this control system. From the Command Zone display or connected wireless device, these features allow the user to monitor the real-time status of every input or output on the vehicle. It also allows users logged in as an administrator to force on inputs or outputs to assist the troubleshooting process.

TCU Module with WiFi

An in cab module will provide WiFi wireless interface and data logging capability. The WiFi interface will comply with IEEE 802.11 b/g/n capabilities while communicating at 2.4 Gigahertz. The module will communicate through a black WiFi antenna allowing a line of site communication range of up to 300 feet with a roof mounted antenna.

The module will transmit a password protected web page to a WiFi enabled device (i.e. most smart phones, tablets or laptops) allowing two levels of user interaction. The firefighter level will allow vehicle monitoring of the vehicle and firefighting systems on the apparatus. The technician level will allow

diagnostic access to inputs and outputs installed on the Command Zone™, control and information system.

The TCU capability will record faults from the engine, transmission, ABS and Command Zone™, control and information systems as they occur. No other data will be recorded at the time the fault occurs. The data TCU will provide up to 2 Gigabytes of data storage.

The TCU will provide a means to download the TCU information and update software in the device.

Indicator Light and Alarm Prove-Out System
A system will be provided which automatically tests basic indicator lights and alarms located on the cab instrument panel.

Voltage Monitor System
A voltage monitoring system will be provided to indicate the status of the battery system connected to the vehicle's electrical load. The system will provide visual and audible warning when the system voltage is below or above optimum levels.

The alarm will activate if the system falls below 11.8 volts DC for more than two (2) minutes.

Dedicated Radio Equipment Connection Points
There will be three (3) studs provided in the primary power distribution center located in front of the officer for two-way radio equipment. The studs will consist of the following:

- 12-volt 40-amp battery switched power
- 12-volt 60-amp ignition switched power
- 12-volt 60-amp direct battery power

There will also be a 12-volt 100-amp ground stud located in or adjacent to the power distribution center.

EMI/RFI Protection
To prevent erroneous signals from crosstalk contamination and interference, the electrical system will meet, at a minimum, SAE J551/2, thus reducing undesired electromagnetic and radio frequency emissions. An advanced electrical system will be used to ensure radiated and conducted electromagnetic interference (EMI) or radio frequency interference (RFI) emissions are suppressed at their source.

The apparatus will have the ability to operate in the electromagnetic environment typically found in fire ground operations to ensure clean operations. The electrical system will meet, without exceptions, electromagnetic susceptibility conforming to SAE J1113/25 Region 1, Class C EMR for 10KHz-1GHz to 100 Volts/Meter. The vehicle OEM, upon request, will provide EMC testing reports from testing conducted on an entire apparatus and will certify that the vehicle meets SAE J551/2 and SAE J1113/25 Region 1, Class C EMR for 10KHz-1GHz to 100 Volts/Meter requirements. Component and partial (incomplete) vehicle testing is not adequate as overall vehicle design can impact test results and thus is not acceptable by itself.

EMI/RFI susceptibility will be controlled by applying appropriate circuit designs and shielding. The electrical system will be designed for full compatibility with low-level control signals and high-powered two-way radio communication systems. Harness and cable routing will be given careful attention to minimize the potential for conducting and radiated EMI/RFI susceptibility.

ELECTRICAL SYSTEM PROGNOSTICS

There will be a software based vehicle tool provided to predict remaining life of the vehicles critical fluid and events.

The system will send automatic indications to the Command Zone™ information center and/or wireless enabled devices to proactively alert of upcoming service intervals.

Prognostics will include the following:

- Engine oil and filter
- Transmission oil and filter

TELEMATICS SYSTEM

Your vehicle will include a cellular-based vehicle telematics system including a telematic control unit with external cellular Wi-Fi and GPS antenna. Pierce will provide access to a web-based user interface portal that will allow users to access vehicle data collected as part of the system, allow users to configure monitoring tools, provide a global view of the location of each vehicle that has the system, provide a summary of fleet data, etc. The web-based user interface portal or certain features thereof may be provided on a subscription basis.

The telematic control unit will be fully integrated into the electrical system of the vehicle, will monitor the vehicle through the CAN data bus, and will transmit data through a secure AT&T 4G LTE cellular connection, and be provided with a 3 year subscription.

The web-based user interface portal will provide, among other features:

- User defined interval notifications
- User defined fault alerts
- Remote access to Command Zone™ diagnostics
- Vehicle analytics and activity monitoring
- Vehicle system status

The system is activated while building your vehicle and thereafter remains active for a 60-day grace period starting when your vehicle ships from the factory. This means that the system is active at the time of factory acceptance and during the 60-day grace period. By selecting this option, it is agreed that use of the system and the web-based user interface portal will be subject to the terms set forth in the Data Systems Agreement referenced at https://www.piercemfg.com/privacy-statement. Customers will be provided with an initial login at the time of factory acceptance to verify performance of the

system and the web-based user interface portal. The term of the subscription, if any, will begin when the vehicle ships from the factory. If customers do not log into the web-based user interface portal and confirm acceptance of the terms before the 60-day grace period ends, the system will be deactivated, and no new data will be collected or retained Pierce. Reactivation can be coordinated through the customer's authorized Pierce Dealer.

ELECTRICAL

All 12-volt electrical equipment installed by the apparatus manufacturer will conform to modern automotive practices. All wiring will be high temperature crosslink type. Wiring will be run, in loom or conduit, where exposed and have grommets where wire passes through sheet metal. Automatic reset circuit breakers will be provided which conform to SAE Standards. Wiring will be color, function and number coded. Function and number codes will be continuously imprinted on all wiring harness conductors at 2.00" intervals. Exterior exposed wire connectors will be positive locking, and environmentally sealed to withstand elements such as temperature extremes, moisture and automotive fluids.

Electrical wiring and equipment will be installed utilizing the following guidelines:

1. All holes made in the roof will be caulked with silicon. Large fender washers, liberally caulked, will be used when fastening equipment to the underside of the cab roof.
2. Any electrical component that is installed in an exposed area will be mounted in a manner that will not allow moisture to accumulate in it. Exposed area will be defined as any location outside of the cab or body.
3. Electrical components designed to be removed for maintenance will not be fastened with nuts and bolts. Metal screws will be used in mounting these devices. Also a coil of wire will be provided behind the appliance to allow them to be pulled away from mounting area for inspection and service work.
4. Corrosion preventative compound will be applied to all terminal plugs located outside of the cab or body. All non-waterproof connections will require this compound in the plug to prevent corrosion and for easy separation (of the plug).
5. All lights that have their sockets in a weather exposed area will have corrosion preventative compound added to the socket terminal area.
6. All electrical terminals in exposed areas will have silicon applied completely over the metal portion of the terminal.

All lights and reflectors, required to comply with Federal Motor Vehicle Safety Standard #108, will be furnished. Rear identification lights will be recessed mounted for protection. Lights and wiring mounted in the rear bulkheads will be protected from damage by installing a false bulkhead inside the rear compartments.

An operational test will be conducted to ensure that any equipment that is permanently attached to the electrical system is properly connected and in working order.

The results of the tests will be recorded and provided to the purchaser at time of delivery.

BATTERY SYSTEM

Six (6) 12 volt, Stryten/Exide, Model 31A950X1W, group 31 batteries that include the following features will be provided:

- 950 CCA, cold cranking amps
- 190 amp reserve capacity
- High cycle
- Rating of 5700 CCA at 0 degrees Fahrenheit
- 1140 minutes of reserve capacity
- SAE Posts

Each battery case will be a black polypropylene material with a vertically ribbed container for increased vibration resistance. The cover will be manifold vented with a central venting location to allow a 45 degree tilt capacity.

The inside of each battery will consist of a "maintenance free" grid construction with poly wrapped separators and a flooded epoxy bottom anchoring for maximum vibration resistance.

BATTERY SYSTEM

There will be a single starting system with an ignition switch and starter button provided and located on the cab instrument panel.

MASTER BATTERY SWITCH

There will be a Kissling, red master battery switch provided within the cab within easy reach of the driver to activate the battery system.

An indicator light will be provided on the instrument panel to notify the driver of the status of the battery system.

BATTERY COMPARTMENTS

Batteries will be placed on non-corrosive mats and be stored in well ventilated compartments located under the cab and bolted directly to the chassis frame. The battery boxes will have reinforced sides. The battery compartments will be constructed of 0.188" steel plate and be designed to accommodate a maximum of three (3) group 31 batteries in each compartment. The battery hold-downs will be of a non-corrosive material. All bolts and nuts will be stainless steel.

Heavy-duty, 2/0 gauge, color coded battery cables will be provided. Battery terminal connections will be coated with anti-corrosion compound.

Battery solenoid terminal connections will be encapsulated with semi-permanent rubberized compound.

JUMPER STUDS

One (1) set of battery jumper studs with plastic color-coded covers will be included on the battery compartments.

BATTERY CHARGER

There will be a Kussmaul™, Chief Series Smart Charger 6012, product code 091-266-12-60, 60 amp battery charger with build-in touch screen display provided.

The battery charger will be wired to the AC shoreline inlet through a junction box located near the battery charger.

The battery charger will be located in the left side crew cab rear facing seat riser located in the center portion of the compartment.

REMOTE CONTROL PANEL - BATTERY CHARGER

There will be a Kussmaul™, Chief Series Smart Charger remote control panel, product code 091-266-RCP included.

The battery charger indicator will be located behind the driver's door on the outside of the cab.

INVERTER

There will be a Xantrex Model 817-2000, 2000W, 12 volt DC to 120 volt AC inverter with a built in LCD display, on/off switch and internal 30A transfer relay provided.

There will be a master on/off switch installed in the driver side cab switch panel.

The inverter will be connected battery direct through proper fusing and also to shoreline AC power.

A load management solenoid will be installed between the battery and the inverter. The inverter will be connected to power when the battery switch is on and system voltage is above the low voltage threshold or when the shoreline is connected.

When the shoreline is connected to the truck, the internal auto transfer switch will allow AC shoreline power to pass through the inverter to the AC loads connected to the inverter.

Per NFPA 1900, 2024 Edition Section 21.5.5.2*, "The alternator and/or battery system will be adequate to provide power for continuous operation for a minimum of 2 hours at full output."

Per the fire department specifications, if all DC loads on the NFPA required electrical analysis report are active, the alternator cannot provide adequate power for continuous operation for 2 hours. The apparatus will be non-compliant to NFPA 1900 standards at time of contract execution.

The load management system will activate in low voltage situations, and the inverter will be de-energized until chassis electrical system voltage recovers.

INVERTER/BATTERY CHARGER LOCATION

The inverter will be installed in the cab inside the left side rear facing seat riser.

AUTO EJECT FOR SHORELINE

There will be one (1) Kussmaul™, Model 091-55-20-120, 20 amp 120 volt AC shoreline inlet(s) provided to operate the dedicated 120 volt AC circuits on the apparatus.

The shoreline inlet(s) will include red weatherproof flip up cover(s).

There will be a release solenoid wired to the vehicle's starter to eject the AC connector when the engine is starting.

The shoreline(s) will be connected to the battery charger.

There will be a mating connector body supplied with the loose equipment.

There will be a label installed near the inlet(s) that state the following:

- Line Voltage
- Current Ratting (amps)
- Phase
- Frequency

The shoreline receptacle will be located on the driver side of cab, above wheel.

JUMPER STUDS

There will be one (1) set of battery jumper studs with plastic color coded covers provided on the lowest point of the driver side battery box; facing outboard.

ALTERNATOR

A Delco Remy®, Model 55SI, alternator will be provided. It will have a rated output current of 430 amps, as measured by SAE method J56. The alternator will feature an integral regulator and rectifier system that has been tested and qualified to an ambient temperature of 257 degrees Fahrenheit (125 degrees Celsius). The alternator will be connected to the power and ground distribution system with heavy-duty cables sized to carry the full rated alternator output.

ROCKER SWITCH IN PLACE OF MEMBRANE

There will be three (3) rocker switch/es provided in place of standard membrane switches for Three switches, DS ALLEY, PS ALLEY, SIREN BRAKE

Each switch will be rocker-type and will include an integral indicator light. For quick, visual indication the switch will be illuminated whenever the switch is active. A 2-ply, scratch resistant laser engraved Gravoply label indicating the use of each switch will be placed below the switches. The label will allow light to pass through the letters for improved visibility in low light conditions. Switches and light source are integral to the switch panel assembly.

ELECTRONIC LOAD MANAGER

An electronic load management (ELM) system will be provided that monitors the vehicles 12-volt electrical system, automatically reducing the electrical load in the event of a low voltage condition, and automatically restoring the shed electrical loads when a low voltage condition expires. This ensures the integrity of the electrical system.

For improved reliability and ease of use, the load manager system will be an integral part of the vehicle's solid state control system requiring no additional components to perform load management tasks. Load management systems which require additional components will not be allowed.

The system will include the following features:

- System voltage monitoring.
- A shed load will remain inactive for a minimum of five minutes to prevent the load from cycling on and off.
- Sixteen available electronic load shedding levels.
- Priority levels can be set for individual outputs.
- High Idle to activate before any electric loads are shed and deactivate with the service brake.
    - If enabled:
        - "Load Man Hi-Idle On" will display on the information center.
        - Hi-Idle will not activate until 30 seconds after engine start up.
- Individual switch "on" indicator to flash when the particular load has been shed.
- The information center indicates system voltage.

The information center, where applicable, includes a "Load Manager" screen indicating the following:

- Load managed items list, with priority levels and item condition.
- Individual load managed item condition:
    - ON = not shed
    - SHED = shed

SEQUENCER

A sequencer will be provided that automatically activates and deactivates vehicle loads in a preset sequence thereby protecting the alternator from power surges. This sequencer operation will allow a gradual increase or decrease in alternator output, rather than loading or dumping the entire 12 volt load to prolong the life of the alternator.

For improved reliability and ease of use, the load sequencing system will be an integral part of the vehicle's solid state control system requiring no additional components to perform load sequencing tasks. Load sequencing systems which require additional components will not be allowed.

Emergency light sequencing will operate in conjunction with the emergency master light switch. When the emergency master switch is activated, the emergency lights will be activated one by one at half-second intervals. Sequenced emergency light switch indicators will flash while waiting for activation.

When the emergency master switch is deactivated, the sequencer will deactivate the warning light loads in the reverse order.

Sequencing of the following items will also occur, in conjunction with the ignition switch, at half-second intervals:

- Cab Heater and Air Conditioning
- Crew Cab Heater (if applicable)
- Crew Cab Air Conditioning (if applicable)
- Exhaust Fans (if applicable)
- Third Evaporator (if applicable)

HEADLIGHTS WITH HALO FLASH

There will be a HiViz part number FT-4X6-4KIT, that includes four (4) 4.00" high x 6.00" long rectangular LED lights with "Halo" parking lamp illumination around the outside of the lamps mounted in the front quad style housing. The headlights to include chrome bezels on each side of the cab grille:

- the outside lamp on each side will contain a part number FT-4X6-HL with low beam LEDs
- the inside lamp on each side will contain a part number FT-4X6-H with high beam LEDs
- the "Halo" around the headlights will be controlled by the headlight/parking light switch
- the lights will be controlled through the headlight switch

The "Halo" around the headlights will flash alternately from driver side to passenger side when emergency master switch is on, a "Halo Flash" switch in the cab is on, and the parking brake is released.

DIRECTIONAL LIGHTS

There will be two (2) Whelen 600 series, LED combination directional/marker lights provided. The lights will be located on the outside cab corners, next to the headlights.

The color of the lenses will be the same color as the LED's.

INTERMEDIATE LIGHT

There will be two (2) Weldon, Model 9186-8580-29, amber LED turn signal marker lights furnished, one (1) each side, in the rear fender panel. The light will double as a turn signal and marker light.

CAB CLEARANCE/MARKER/ID LIGHTS

There will be two (2) Truck-Lite Model 33050Y, lights with amber LEDs, amber lenses, and rubber grommet provided to indicate the presence and overall length of the vehicle in the following locations:

- Two (2) lights installed as front side clearance lights will be installed, one (1) on each side above the cab doors.

The lights will be wired to the running lights of the vehicle.

All other forward facing clearance lights will be included with the visor scene light.

FRONT CAB SIDE DIRECTIONAL/MARKER LIGHTS

There will be two (2) Truck-Lite®, Model 19036Y, amber LED lights installed to the outside of the chrome wrap around bezel, one (1) on each side of the cab.

The lights will activate as marker lights with the headlight switch and directional lights with the corresponding directional circuit.

REAR CLEARANCE/MARKER/ID LIGHTING

There will be three (3) Truck-Lite®, Model 33050R, LED lights used as identification lights recessed and located at the rear of the apparatus per the following:

- As close as practical to the vertical centerline
- Centers spaced not less than 6.00" or more than 12.00" apart
- Red in color
- All at the same height

There will be two (2) Truck-Lite, Model 33050R, LED lights recessed at the rear of the apparatus used as clearance lights located at the rear of the apparatus per the following:

- To indicate the overall width of the vehicle
- One (1) each side of the vertical centerline
- As near the top as practical
- Red in color
- To be visible from the rear
- All at the same height

There will be two (2) Truck-Lite, Model 33050R, LED lights recessed on the side of the apparatus as marker lights as close to the rear as practical per the following:

- To indicate the overall length of the vehicle
- One (1) each side of the vertical centerline
- As near the top as practical
- Red in color
- To be visible from the side
- All at the same height

There will be two (2) red reflectors located on the rear of the truck facing to the rear. One (1) each side, as far to the outside as practical, at a minimum of 15.00", but no more than 60.00", above the ground.

There will be two (2) red reflectors located on the side of the truck facing to the side. One (1) each side, as far to the rear as practical, at a minimum of 15.00", but no more than 60.00", above the ground.

Per FMVSS 108 and CMVSS 108 requirements.

REAR FMVSS LIGHTING

The rear stop/tail and directional lighting included in the rear tail light housing will include the following:

- Two (2) Whelen®, Model M62BTT, 4.30" high x 6.70" wide x 1.40" deep brake/tail lights with red LEDs
- Two (2) Whelen, Model M62T, 4.30" high x 6.70" wide x 1.40" deep directional lights with amber LEDs. The directional lights will be set to Steady On (Arrow) flash pattern.
- The lens color(s) to be the same as the LEDs.

There will be two (2) Whelen Model M62BU, LED backup lights provided in the tail light housing.

LICENSE PLATE BRACKET

One (1) license plate bracket constructed of stainless steel will be provided at the rear of the apparatus.

One (1) white LED light with chrome housing will be provided to illuminate the license plate. A stainless steel light shield will be provided over the light that will direct illumination downward, preventing white light to the rear.

LIGHTING BEZEL

There will be two (2) Whelen, Model M6FCV4P, four (4) place chromed ABS housings with Pierce logos provided for the rear M6 series stop/tail, directional, back up, scene lights or warning lights.

BACK-UP ALARM

An ECCO, Model 505, solid state electronic audible back-up alarm that actuates when the truck is shifted into reverse will be provided. The device will sound at 60 pulses per minute at a constant 87db.

WARNING LIGHT FLASH PATTERN

The flash pattern of all the exterior warning lights will be set to meet the certified California, Title XIII flash pattern by either the light manufacturer's default flash pattern or by a conversion change to the certified flash pattern.

MOUNTING, RECESS LIGHT

There will be one (1) recessed pocket(s) for mounting light(s). The recessed pocket(s) will be provided right side rear body bulkhead.

CAB PERIMETER SCENE LIGHTS

There will be four (4) TecNiq, Model T10-LC00-1, 15.00" lights with white LEDs and 45 degree stainless steel brackets provided per the following:

- one (1) under the driver's side cab access step
- one (1) under the passenger's side cab access step
- one (1) under the passenger's side crew cab access step
- one (1) under the driver's side crew cab access step

The lights will be activated when the battery switch is on, when the respective door is open and by the same control selected for the body perimeter lights.

PUMP HOUSE PERIMETER LIGHTS

There will be two (2) TecNiq, Model T10-LC00-1, 15.00" white 12 volt DC LED weatherproof strip lights provided under the pump panel running boards, one (1) each side.

The lights will be controlled by the same means as the body perimeter lights.

BODY PERIMETER SCENE LIGHTS

There will be two (2) TecNiq, Model T10-LC00-1, 15.00" 12 volt DC LED strip lights provided at the rear step area of the body, one (1) each side shining to the rear. The lights to be moved forward under the step for angle of approach protection.

The perimeter scene lights will be activated when a switch within reach of the driver is activated, the parking brake is applied and the headlight switch activates the side facing perimeter lights.

STEP LIGHTS

Four (4) white LED step lights will be provided. One (1) step light will be provided on each side, on the front compartment face and two (2) step lights at the rear to illuminate the tailboard.

These step lights will be actuated with the pump panel light switch.

All steps on the apparatus will be illuminated per the current edition of applicable NFPA standards.

LIGHT GUARD

There will be two (2) aluminum treadplate guard(s) provided to protect the Whelen Summit light bar(s) located located on the left and right side catwalks.

12 VOLT LIGHTING

There will be a Whelen® Model S72M**, 72.00" long 32,400 lumens DC powered light provided on visor bracket(s) hanging off the front of the cab roof over the windshield. The painted parts of this light assembly to be black.

The light will include the following:

- White scene LEDs
- Two (2) amber LED modules as clearance lights
- Three (3) amber LED modules as identification lights
- Four (4) additional LED modules. The additional additional modules to be four (4) scene light modules with white LEDs.

The clearance and identification LEDs will be activated with the headlight switch.

The scene LEDs will be activated when the battery switch is on and by a switch at the driver's side switch panel, by a switch at the left side pump panel and by a switch at the passenger's side switch panel is on.

There will be a switch in the cab on the switch panel to control the flashing or spot LED modules.

Amber flashing LED modules will be deactivated when the parking brake is released.

The white scene and flashing LED modules may be load managed when the parking brake is applied.

12 VOLT DC SCENE LIGHTS
There will be one (1) Whelen® Model PCPSM2*, 16,000 lumens 12 volt DC powered light(s) with white LEDs installed on the cab located, on the drivers side of cab, aft of the crew cab door, as high as possible.

The surface mount housing(s) will be provided with a chrome cover.

The light(s) will be activated by a switch at the driver's side switch panel, by a switch at the left side pump panel, by a switch at the passenger's side switch panel and by a switch at the right side pump panel.

The light(s) may be load managed when the parking brake is applied.

12 VOLT DC SCENE LIGHTS
There will be one (1) Whelen® Model P*H2*, 17,750 lumens 12 volt DC powered lights with white LEDs and a combination of flood and spot optics installed on the apparatus located, on the rear of the cab, right side.

The light(s) to be installed on push up side mount outside pole length to be 20.00" long with a handle holder and sensor connecting the pole to the Do Not Move Truck Indicator circuit.

The painted parts of this light assembly to be black.

The lights will be activated by a switch at the right side pump panel.

The light(s) may be load managed when the parking brake is applied.

12 VOLT DC SCENE LIGHTS
There will be one (1) Whelen® Model P*H2*, 17,750 lumens 12 volt DC powered lights with white LEDs and a combination of flood and spot optics installed on the apparatus located, on the rear of the cab, left side.

The light(s) to be installed on push up side mount outside pole length to be 20.00" long with a handle holder and sensor connecting the pole to the Do Not Move Truck Indicator circuit.

The painted parts of this light assembly to be black.

The lights will be activated by a switch at the left side pump panel.

The light(s) may be load managed when the parking brake is applied.

12 VOLT DC SCENE LIGHTS

There will be one (1) Whelen® Model PCPSM2*, 16,000 lumens 12 volt DC powered light(s) with white LEDs installed on the cab located, on the drivers side of cab, aft of the crew cab door, as high as possible.

The surface mount housing(s) will be provided with a chrome cover.

The light(s) will be activated by a switch at the driver's side switch panel, by a switch at the left side pump panel and by a switch at the passenger's side switch panel.

The light(s) may be load managed when the parking brake is applied.

12 VOLT LIGHTING

There will be one (1) Whelen® Model S30M**, 12,960 lumens 30.00" 12 volt DC light(s) with white LEDs provided on the right side of the body located, on the catwalk edge, centered above the rear wheel well. The painted parts of this light assembly to be black.

The light(s) will include the following:

- Six (6) scene light modules with white LEDs
- Three (3) amber LEDs as marker lights
- Two (2) additional LED modules. The additional modules to be two (2) scene light modules with white LEDs.

The lights will be activated per the following:

- The amber marker lights not activated.
- The scene LEDs will be controlled by the same control that has been selected for the passenger's side scene light(s).
- There will be a switch in the cab on the switch panel to control the flashing or spot LED modules.
- The light(s) may be load managed when the parking brake is applied.

12 VOLT LIGHTING

There will be one (1) Whelen® Model S30M**, 12,960 lumens 30.00" 12 volt DC light(s) with white LEDs provided on the left side of the body located, on the catwalk edge, centered above the rear wheel well. The painted parts of this light assembly to be black.

The light(s) will include the following:

- Six (6) scene light modules with white LEDs
- Three (3) amber LEDs as marker lights
- Two (2) additional LED modules. The additional modules to be two (2) scene light modules with white LEDs.

The lights will be activated per the following:

- The amber marker lights not activated.
- The scene LEDs will be controlled by the same control that has been selected for the driver's side scene light(s).
- There will be a switch in the cab on the switch panel to control the flashing or spot LED modules.
- The light(s) may be load managed when the parking brake is applied.

12 VOLT LIGHTING

There will be two (2) Whelen® Model PCPSM1*, 10,444 lumens 12 volt DC surface mount light(s) installed on the body of the apparatus located, on the rear body bulkheads, one (1) each side, directly under the upper zone warning lights.

The light(s) will include black housing(s) with a chrome cover.

The light(s) will be controlled by a switch at the driver's side switch panel, by a switch at the left side pump panel, by a switch at the passenger's side switch panel and by a switch in a recessed cup located at the driver's side rear bulkhead.

The light(s) may be load managed when the parking brake is applied.

HOSE BED LIGHTS

There will be Amdor LumaBar H2O, Model AY-9750-20, 20.00" white 12 volt DC LED light strips provided to illuminate the hose bed area.

- One (1) LED light strip will be installed on the driver's side hose bed cover 30.00" from the front of the hose bed, as close to the hinge as practical.
- One (1) LED light strip will be installed on the passenger's side hose bed cover 30.00" from the rear of the hose bed, as close to the hinge as practical.

The lights will be activated when the hosebed cover is raised.

WALKING SURFACE LIGHTS

There will be two (2) Amdor®, Model AY-LB-12HW020, 350 lumen, 20.00" long, white 12 volt DC LED strip lights provided in the cargo area to illuminate the interior surface of the cargo area. Light(s) will be located under the top flange of the cargo area.

There will be six (6) 12 volt DC LED lights provided on the hose bed cover to illuminate the walking surface. The lights will be located near the hose bed cover hinges evenly spaced three (3) on each side.

The lights in the cargo area and the lights on the hose bed cover will be activated when the body step lights are on.

WATER TANK

Booster tank will have a capacity of 500 gallons and be constructed of polypropylene plastic by United Plastic Fabricating, Incorporated.

Tank joints and seams will be nitrogen welded inside and out.

Tank will be baffled in accordance with the current edition of applicable NFPA standards.

Baffles will have vent openings at both the top and bottom to permit movement of air and water between compartments.

Longitudinal partitions will be constructed of .38" polypropylene plastic and will extend from the bottom of the tank through the top cover to allow for positive welding.

Transverse partitions will extend from 4.00" off the bottom of the tank to the underside of the top cover.

All partitions will interlock and will be welded to the tank bottom and sides.

Tank top will be constructed of .50" polypropylene. It will be recessed .38" and will be welded to the tank sides and the longitudinal partitions.

Tank top will be sufficiently supported to keep it rigid during fast filling conditions.

Construction will include 2.00" polypropylene dowels spaced no more than 30.00" apart and welded to the transverse partitions. Two (2) of the dowels will be drilled and tapped (.50" diameter, 13.00" deep) to accommodate lifting eyes.

A sump that will be sized dependent on the tank to pump plumbing will be provided at the bottom of the water tank.

Sump will include a drain plug and the tank outlet.

Tank will be installed in a fabricated cradle assembly constructed of structural steel.

Sufficient crossmembers will be provided to properly support bottom of tank. Crossmembers will be constructed of steel bar channel or rectangular tubing.

Tank will "float" in cradle to avoid torsional stress caused by chassis frame flexing. Rubber cushions, .50" thick x 3.00" wide, will be placed on all horizontal surfaces that the tank rests on.

Stops or other provision will be provided to prevent an empty tank from bouncing excessively while moving vehicle.

Mounting system will be approved by the tank manufacturer.

Fill tower will be constructed of 0.50" polypropylene and will be a minimum of 8.00" wide x 14.00" long.

Fill tower will be furnished with a 0.25" thick polypropylene screen and a hinged cover.

An overflow pipe, constructed of 4.00" schedule 40 polypropylene, will be installed approximately halfway down the fill tower and extend through the water tank and exit to the rear of the rear axle.

WATER TANK RESTRAINT
A heavy-duty water tank restraint will be provided.

HOSE BED
The hose bed will be fabricated of 0.125"-5052 aluminum with a nominal 38,000 psi tensile strength.

The hose bed will be as low as practical.

Upper and rear edges of side panels will have a double break for rigidity, a split tube finish will not be acceptable.

The upper area at the rear of the hose bed will be covered with brushed stainless steel to prevent damage to painted surface when hose is removed.

Flooring of the hose bed will be removable aluminum grating with the top surface corrugated to aid in hose aeration. The grating slats will be a minimum of 0.50" x 4.50" with spacing between slats for hose ventilation.

A cross divider will be provided at the front of the hose bed before the tank transitions from the lower section to the upper section. The divider will run from the top of the side sheet down below the hose bed grating.

The hose bed floor will be 69.00"" from the ground when the truck is fully loaded.

The hose bed interior walls will be painted to match the lower body color.

Hose bed will accommodate the following hose from left to right: hosebed #1 = 200' 1.75" DJ hose, hosebed #2 = 800' 2.50" DJ hose, hosebed #3 = 200' of 2.50" DJ hose, hosebed #4 = 1000' 4" DJ hose, hosebed #5 = 200' 1.75" DJ hose.

HOSE BED DIVIDER
Four (4) hosebed dividers will be furnished for separating hose.

Each divider will be constructed of a 0.25" brushed aluminum sheet. Flat surfaces will be sanded for uniform appearance or constructed of brushed aluminum.

Divider will be fully adjustable by sliding in tracks, located at the front and rear of the hose bed.

Divider will be held in place by tightening bolts, at each end.

Acorn nuts will be installed on all bolts in the hose bed which have exposed threads.

HOSE BED COVER
A two (2) section hose bed cover, constructed of .125" bright aluminum treadplate will be furnished. The cover will be hinged with full length stainless steel piano hinge. The sides will be flat. The cover will be reinforced to support the weight of a man walking on it. A center support, front to back, will not be required. A stationary bridgework support will be provided at the rear to support the cover.

If access to water tank fill tower is blocked by the hose bed cover, then a hinged door will be provided in it so that tank may be filled without raising cover doors.

Chrome grab handles and two (2) gas filled cylinders will be provided to assist in opening and closing the cover. Two (2) rubber latches will be provided to hold the cover in the stowed position. A handrail will be provided at the rear.

The hose bed cover will be connected to the Do Not Move Truck indicator. The light will be activated if the cover is not in the stowed position and the parking brake is released.

HOSE RESTRAINT REAR

At the rear of the hose bed, two (2) vinyl flaps and three (3) vertical straps will be provided.

The vinyl flaps will be black. The vinyl will be provided for hosebeds #2 and #4. The vinyl flaps will be provided with hinged style seat belt buckle at the bottom of the hose bed. The top of the vinyl flaps will be attached to the top of the hosebed with seat belt buckles. The seat belt buckles will be provided with a metal bar, to connect each set of two buckles, and attached to a web strap, to allow a single pull release per set of two buckles. The bottom of the flaps will be chain weighted. If a strap is provided for the seat belt buckles, the color of the strap will be black.

The three (3) vertical straps will be provided for hosebeds #1, #3 and #5. The straps will have Velcro and footman loops at the top and bottom.

REINFORCEMENT, HOSEBED DIVIDERS

The four (4)single sheet .25" divider(s) will be reinforced by attaching them to the crosstube or cross structure of the hose bed cover with an adjustable track.

CROSS DIVIDER

A divider will be provided at the front in the hose bed. The divider will be bolted to the front sheet and cross divider.

The divider will be installed inboard from the fill towers, as close as possible. The divider will be permanently mounted.

The front, rear, and bottom edges of this divider will utilize weather stripping and caulk to provide a weather resistant seal.

RIGHT SIDE SINGLE HOSE BED COVER

A cover will be provided over the right side portion of the hose bed, between the front body sheet and hose bed cross divider.

The cover will be constructed of .19" bright aluminum treadplate and hinged along the outboard edge with a full length stainless steel piano hinge. A D-ring latch will be provided for the cover. The cover will have a 1.25" flange all around with additional bracing to support the weight of a firefighter.

Access to the fill towers will be provided.

This cover will be included in the "Do Not Move Truck" circuit to provide an alert when open.

RUNNING BOARDS

Running boards will be fabricated of 0.125" bright aluminum treadplate.

Each running board will be supported by a welded 2.00" square tubing and channel assembly, which will be bolted to the pump compartment substructure.

Running boards will be 12.75" deep and spaced 0.50" away from the pump panel.

A splash guard will be provided above the running board treadplate.

TAILBOARD

The tailboard will also be constructed of .188" bright aluminum treadplate and spaced .50" from the body, as well as supported by a structural steel assembly.

The tailboard area will be 20.00" deep in the center area and 4.00" deep to the rear of the side compartments. The tailboard will be T-shaped. The 4.00" extension to the rear of the side compartments shall be angled up to prevent this area from being used as a stepping surface.

The outboard sides of the tailboard will be angled at 45 degrees beginning at the point where the body meets the tailboard at the forward outboard edge angling rearward to the rear edge of the tailboard.

The exterior side will be flanged down and in for increased rigidity of tailboard structure.

REAR WALL, SMOOTH ALUMINUM/BODY MATERIAL

The rear facing surfaces of the center rear wall will be smooth aluminum.

The bulkheads, the surface to the rear of the side body compartments, will be smooth and the same material as the body.

The center rear wall will be inset 16" from the body bulkhead rear walls.

Any inboard facing surfaces below the height of the hosebed will be brushed stainless steel.

REAR TOW EYES

Two (2) tow eyes, which are an integral part of the body mounting substructure, will be installed below the rear of the truck.

The tow eyes will be of adequate strength to allow the truck to be pulled from the eyes.

REAR TOW BAR

One (1) tow bar will be installed under the tailboard.

The tow bar assembly will be designed and positioned to allow up to a 30-degree upward angled pull of 17,000 lb, or a 20,000 lb straight horizontal pull in line with the centerline of the vehicle.

The tow bar design will have been tested and evaluated using finite element analysis techniques.

MOUNTING FOR TRAFFIC CONES

Mounting will be provided for traffic cones at the tailboard, on the far right side (in the forward corner) of the tailboard and next to the rear and right side body walls . Mounting will consist of a vertical post with treadplate fins and a formed aluminum treadplate base to hold the cones. The base will have sides on its right, left and rear. The front of the tray will be flanged down. Any edges of the tray will be rounded and smoothed. The mounting will be bolted to the tailboard/rear bumper. The mounting will be provided for cones that are 11.00" x 11.00" base x 18.00" high x 8.00" hole at the bottom. Storage bracket will be for six (6) cones (center rod to be 16" tall) in dimensions.

RUNNING BOARD HOSE RESTRAINT

A pair of 2.00" wide black nylon straps with 2.00" side release fasteners will be provided for each hose tray to secure the hose during travel. There will be Two (2) hose trays located one (1) in each side running board.

HOSE TRAY

Two (2) hose trays will be recessed one (1) in each side running board.

Capacity of the tray will be 20.00' of 5.00" soft suction hose.

Rubber matting will be installed on the floor of the tray to provide proper ventilation. Drain holes will be provided.

COMPARTMENTATION

Body and compartments will be fabricated of 0.125", 5052-H32 aluminum.

Side compartments will be an integral assembly with the rear fenders.

Circular fender liners will be provided for prevention of rust pockets and ease of maintenance.

Side compartment flooring will be of the sweep out design with the floor higher than the compartment door lip.

The side compartment door opening will be framed by flanging the edges in 1.75" and bending out again 0.75" to form an angle.

Drip protection will be provided above the doors by means of bright aluminum extrusion, formed bright aluminum treadplate or polished stainless steel.

The top of the compartment will be covered with bright aluminum treadplate rolled over the edges on the front, rear and outward side. These covers will have the corners welded.

Side compartment covers will be separate from the compartment tops.

Front facing compartment walls will be covered with bright aluminum treadplate.

All screws and bolts which protrude into a compartment will have acorn nuts on the ends to prevent injury.

UNDERBODY SUPPORT SYSTEM

Due to the severe loading requirements of this pumper a method of body and compartment support suitable for the intended load will be provided.

The backbone of the support system will be the chassis frame rails which is the strongest component of the chassis and is designed for sustaining maximum loads.

Forward to the rear axle, the support system will include "L"-shaped support members bolted to the chassis frame rails. These welded support members will include vertical formed channels, horizontal structural channels, and support gussets. These parts extend from the chassis frame outward underneath the body.

Rearward to the rear axle, the body support system will include two rearward facing "L"-shaped support members bolted to the chassis frame rails. These support members will be connected to the two body supporting crossmembers forming a boxed foundation for the rear body support system.

Steel upper platform decks will be mounted on the top of these support members to create a floating substructure which will result in a 500 lb equipment support rating per lower compartment.

All structural components of this system will be made from high strength 50K steel plate material or structural steel componentry. The steel frames as well as the steel vertical angles will be treated with an epoxy E-coat or equivalent to provide resistance to corrosion and chemicals as standard.

The floating substructure will be separated from the horizontal members with neoprene elastomer isolators. These isolators will reduce the natural flex stress of the chassis from being transmitted to the body.

Isolators will have a broad load range, proven viability in vehicular applications, be of a fail-safe design and allow for all necessary movement in three (3) transitional and rotational modes.

The neoprene isolators will be installed in a pattern which assimilates a three (3)-point mounting pattern to reduce the natural flex of the chassis being transmitted to the body.

A design with body compartments hanging on the chassis in an unsupported fashion will not be acceptable.

AGGRESSIVE WALKING SURFACE

All exterior surfaces designated as stepping, standing, and walking areas will comply with the required average slip resistance of the current NFPA standards.

LOUVERS

Louvers will be stamped into compartment walls to provide the proper airflow inside the body compartments and to prevent water from dripping into the compartment. Where these louvers are provided, they will be formed into the metal and not added to the compartment as a separate plate.

TESTING OF BODY DESIGN

Body structural analysis will be fully tested. Proven engineering and test techniques such as finite element analysis, strain gauging, and model analysis will be performed with special attention given to fatigue, life and structural integrity of the body and substructure.

Body will be tested while loaded to its greatest in-service weight.

The criteria used during the testing procedure will include:

- Raising opposite corners of the vehicle tires 9.00" to simulate the twisting a truck may experience when driving over a curb.
- Making a 90 degree turn, while driving at 20 mph to simulate aggressive driving conditions.
- Driving the vehicle at 35 mph on a washboard road.
- Driving the vehicle at 55 mph on a smooth road.
- Accelerating the vehicle fully, until reaching the approximate speed of 45 mph on rough pavement.

Evidence of actual testing techniques will be made available upon request.

LEFT SIDE COMPARTMENTATION

The left side compartmentation will consist of five lap door compartments.

A vertically hinged, single door compartment in the lower area ahead of the rear wheels will be provided. The interior dimensions of this compartment will be 27.50" wide x 33.63" high x 25.88" deep in the lower 25.00" of the compartment and 12.00" deep in the remaining upper portion. The clear door opening will be a minimum of 21.63" wide x 27.88" high.

A horizontally hinged, single lift-up door compartment in the upper area, ahead of the rear wheels, will be provided. The interior dimensions of this compartment will be 63.00" wide x 32.88" high x 12.00" deep. The clear door opening of this compartment will be a minimum of 58.25" wide x 27.00" high.

A horizontally hinged, single lift-up door compartment in the upper area, behind the rear wheels, will be provided. The interior dimensions of this compartment will be 62.50" wide x 32.88" high x 12.00" deep. The clear door opening of this compartment will be a minimum of 58.25" wide x 27.00" high.

A 3.00" gap will be provided on the outside of the body panel between the upper liftup compartments.

A vertically hinged, single door compartment in the lower area behind the rear wheels will be provided. The interior dimensions of this compartment will be 31.75" wide x 34.63" high x 25.88" deep in the lower 26.00" of the compartment and 12.00" deep in the remaining upper portion. The clear door opening will be a minimum of 28.63" wide x 28.88" high.

A full height, vertically hinged, single door compartment behind the rear wheels will be provided. The interior dimensions of this compartment will be 15.25" wide x 67.63" high x 12.00" deep. The clear door opening will be a minimum of 10.13" wide x 62.88" high.

The interior height of the compartments will be measured from the compartment floor to the ceiling. The depth of the compartments will be measured from the back wall to the inside of the door frame.

Closing of the doors will not require releasing, unlocking, or unlatching any mechanism and will easily be accomplished with one hand.

The vertically hinged doors will be furnished with a positive door holder.

The lift-up door will be furnished with two gas-charged cylinders to assist in the opening of the door and to maintain the door in an open position. There will be a field adjustable, three-position bracket mounted on the vertical side door opening that will allow the door to be held open at 87°, 90°, or 93°.

RIGHT SIDE COMPARTMENTATION

The right side compartmentation will consist of five (5) lap door compartments.

A vertically hinged, single door compartment in the lower area ahead of the rear wheels will be provided. The interior dimensions of this compartment will be 27.50" wide x 32.63" high x 25.88" deep in the lower 24.00" of the compartment and 12.00" deep in the remaining upper portion. The clear door opening will be a minimum of 21.63" wide x 26.88" high.

A horizontally hinged, single lift-up door compartment in the upper area, ahead of the rear wheels, will be provided. The interior dimensions of this compartment will be 63.00" wide x 32.88" high x 12.00" deep. The clear door opening of this compartment will be a minimum of 58.25" wide x 27.00" high.

A horizontally hinged, single lift-up door compartment in the upper area, behind the rear wheels, will be provided. The interior dimensions of this compartment will be 65.50" wide x 32.88" high x 12.00" deep. The clear door opening of this compartment will be a minimum of 58.25" wide x 27.00" high.

A 3.00" gap will be provided on the outside of the body panel between the upper liftup compartments.

A vertically hinged, single door compartment in the lower area behind the rear wheels will be provided. The interior dimensions of this compartment will be 31.75" wide x 34.63" high x 25.88" deep in the lower 26.00" of the compartment and 12.00" deep in the remaining upper portion. The clear door opening will be a minimum of 28.63" wide x 28.88" high.

A full height, vertically hinged, single door compartment behind the rear wheels will be provided. The interior dimensions of this compartment will be 15.25" wide x 67.63" high x 12.00" deep. The clear door opening will be a minimum of 10.13" wide x 62.88" high.

The interior height of the compartments will be measured from the compartment floor to the ceiling. The depth of the compartments will be measured from the back wall to the inside of the door frame.

Closing of the doors will not require releasing, unlocking, or unlatching any mechanism and will easily be accomplished with one (1) hand.

The vertically hinged doors will be furnished with a positive door holder.

The lift-up door will be furnished with two (2) gas-charged cylinders to assist in the opening of the door and to maintain the door in an open position. There will be a field adjustable, three (3)-position bracket mounted on the vertical side door opening that will allow the door to be held open at 87, 90, or 93 degrees.

SIDE COMPARTMENT DOORS

All hinged compartment doors will be lap style with double panel construction and will be a minimum of 1.50" thick. The doors will be made out of the same material as the body. To provide additional door strength a "C" section reinforcement will be installed between the outer and interior panels.

Doors will be provided with a closed cell rubber gasket around the surface that laps onto the body. A second heavy-duty automotive rubber molding with a hollow core will be installed on the door framing that seals onto the interior panel, to ensure a weather resisting compartment.

All compartment doors will have polished stainless steel continuous hinge with a pin diameter of 0.25" that is bolted or screwed on with stainless steel fasteners.

All door locking mechanisms will be fully enclosed within the door panels to prevent fouling of the lock in the event equipment inside shifts into the lock area.

Doors will be latched with recessed, polished stainless steel "D" ring handles and FMVSS approved door latching mechanisms.

To prevent corrosion caused by dissimilar metals, compartment door handles will not be attached to outer door panel with screws. A rubber gasket will be provided between the "D" ring handle and the door.

REAR COMPARTMENTATION

A roll-up door compartment above the rear tailboard will be provided.

The interior dimensions of this compartment will be 40.00" wide x 32.63" high x 25.88" deep. The spool of the rollup door at the top of the compartment takes up some usable space. The depth of the compartment will be calculated with the compartment door closed.

A louvered, removable access panel will be furnished on the back wall of the compartment.

The rear compartment will be open into the rear side compartments.

The clear door opening of this compartment will be a minimum of 33.25" wide x 22.88" high.

Closing of the door will not require releasing, unlocking, or unlatching any mechanism and will easily be accomplished with one hand.

ROLLUP REAR COMPARTMENT DOOR

The rear roll up door will be double faced aluminum construction, painted one (1) color to match the lower portion of the body and manufactured by R-O-M Corporation.

The slats will be double wall box frame extrusion. The exterior surface will be flat and the interior surface will be concaved to help loose equipment fall to the ground and prevent loose equipment from jamming the door.

Between each slat will be a PVC inner seal to prevent metal to metal contact and prevent dirt or moisture from entering the compartments.

A lift bar with locking key latches to be provided for each roll-up door. The keys to be Model 751 to match all compartment and cab doors. The lift bar will be located at the bottom of the door and have latches on the outer extrusion of the door frame. A ledge will be supplied over the lift bar as additional area to aid in closing the door.

Each door will have a 4.00" counter balance to assist in lifting.

A heavy-duty magnetic switch will be used for control of open compartment door warning lights.

KEYED LOCK(S)

There will be ten (10) compartment doors that require a keyed lock. The compartments to have a keyed lock will be all side body compartment doors.

LIFTUP DOOR PULL STRAPS

There will be four (4) compartment doors provided with pull straps. The pull straps will be 10.00" long and black in color.

The straps will be installed directly to the inside of the liftup door. Hook and loop fabric will be mounted to the inside of the liftup door and on the pull straps to allow the strap to be retained inside the compartment while being closed.

The liftup door compartments to have these straps will be LS3, LS4, RS3 and RS4.

DOOR FRAME SCUFFPLATE
Ten (10) scuffplates will be provided for the lower door frame(s) all side body compartments. Each scuffplate will be brushed stainless steel with a .38" lip down.

SCUFFPLATE ON INTERIOR OF COMPARTMENT DOOR(S)
The ten (10) compartment doors will include a brushed stainless steel scuffplate to cover the entire width and height on the inside panel of each door pan.

Scuffplate will be located all side body compartment doors.

ROLL-UP DOOR TRIM
The exterior of the aluminum trim around the door opening will be painted job color.

There will be one (1) compartments with the trim painted.

MAGNETIC DOOR SWITCH
The all side body compartment doors and the two exterior compartment doors on the sides of the cab will be provided with a magnetic style door switch. A quantity of 12 compartment doors compartment will have the magnetic style switch.

The magnetic style switch will be used for control of "open compartment door" warning lights.

COMPARTMENT LIGHTING
There will be eleven (11) compartment(s) with two (2) white 12 volt DC LED compartment light strips. The dual light strips will be centered vertically along each side of the door framing. There will be two (2) light strips per compartment. The dual light strips will be in all body compartment(s).

Any remaining compartments without light strips will have a 6.00" diameter Truck-Lite, Model: 79384 light. Each light will have a number 1076 one filament, two wire bulb.

Opening the compartment door will automatically turn the compartment lighting on.

COMPARTMENT LIGHTING
Metal clamps will be used to retain the strip lighting in all body compartments.

MOUNTING TRACKS
There will be seven (7) sets of tracks for mounting shelf(s) in standard location in LS2, LS3, LS4, LS5, RS3 and RS5. Also need set of tracks on the special height partition in RS3 that comes down from the ceiling for a shelf to the right of the partition. These tracks will be installed vertically to support the adjustable shelf(s), and will be full height of the compartment. The tracks will be unpainted with a natural finish.

ADJUSTABLE SHELVES
There will be five (5) shelves with a capacity of 500 lb provided.

The shelf construction will consist of .188" aluminum with a dual action finish with 2.00" sides.

Each shelf will be infinitely adjustable by means of a threaded fastener, which slides in a track.

The shelves will be held in place by .12" thick stamped plated brackets and bolts.

The location(s) will be in RS5 centered between the floor and the ceiling, in LS2 centered between the floor and ceiling, in LS3 centered between the floor and ceiling, in LS5 centered between the floor and ceiling and in LS4 centered between the floor and ceiling to right of the partition.

VERTICAL COMPARTMENT PARTITION
One (1) partition will be provided.

The partition construction will consist of body material with a dual action finish. Each partition will be the full vertical height of the compartment.

The location(s) will be in LS4, 32.00" from the forward door frame.

"L" SHAPED PARTITION IN COMPARTMENT
One (1) partition "L" shaped partition, with a dual action finish, will be located in compartment RS3 mounted to the front wall, tank wall, and ceiling. The partition will be sized to create a clear opening of 44" from forward wall and 20" from the ceiling. The vertical lip will have a 1" flange, and the horizontal lip will have a 2" flange. There will be a lip provide on each end of the "L" shaped partition for securing the partition at the bottom and side of the compartment.

VERTICAL COMPARTMENT PARTITION
One (1) partition will be bolted in in the RS3 compartment, 44" from the forward door frame. Each partition will be 21.00" in height and will extend down from the ceiling so the area below the partition is open vertical height of the compartment. Each partition will be with a dual action finish.

MATTING, COMPARTMENT SHELVING
Turtle Tile compartment matting will be provided in six (6) shelves. The locations are, all body compartment shelves.

The color of the Turtle Tile will be black.

MATTING, COMPARTMENT FLOOR
Turtle Tile compartment matting will be provided in 13 compartments on the compartment floor. The locations are, all body compartment floors.

The Turtle Tile will be black and the leading edge of the matting will include the beveled edge. The beveled edge will be black.

RUB RAIL
Bottom edge of the side compartments will be trimmed with a bright aluminum extruded rub rail.

Trim will be 2.12" high with 1.38" flanges turned outward for rigidity.

The rub rails will not be an integral part of the body construction, which allows replacement in the event of damage.

BODY FENDER CROWNS

Polished stainless steel fender crowns will be provided around the rear wheel openings with a dielectric barrier will be provided between the fender crown and the fender sheet metal to prevent corrosion.

The fender crowns will be held in place with stainless steel screws that thread directly into a composite nut and not directly into the parent body sheet metal to eliminate dissimilar metals contact and greatly reduce the chance for corrosion. Rubber welting will be provided between the body and crown.

BODY FENDER LINER

A aluminum painted to match the lower body color fender liner will be provided. The liners will be removable to aid in the maintenance of rear suspension components.

HARD SUCTION HOSE PROVIDED BY DEALER

Hose is not on the apparatus as manufactured. The dealer will provide suction or supply hose.

There will be Two (2) lengths of 10' long x3.00" diameter hose provided and equipped with a 2.50" NST rocker lug couplings provided on the ends. The brand will be Kochek.

HOSE TROUGH

Two (2) troughs for hard suction hose storage will be installed on the hose bed side of hydraulic ladder rack system. The troughs will be constructed of aluminum and painted job color.

The hard suction hose will be held in place by Velcro® straps.

The size, length and brand of hose that will be stored on the rack will be 3.00" x 10' with 2.50" rocker lug couplings.

HANDRAILS

The handrails will be 1.25" diameter knurled aluminum to provide a positive gripping surface.

Chrome plated end stanchions will support the handrail. Plastic gaskets will be used between end stanchions and any painted surfaces.

Drain holes will be provided in the bottom of all vertically mounted handrails.

Handrails will be provided to meet current edition of applicable NFPA standards. The handrails will be installed as noted on the sales drawing.

One (1) vertical handrail will be located on the left side rear beavertail.

ADDITIONAL HANDRAIL

One (1) handrail, 12.00" long, will be mounted horizontally, on the rear body, left of the 2.50" outlet and under the hosebed . The handrail(s) will be constructed out of knurled aluminum.

EXTINGUISHER/AIR BOTTLE/ STORAGE (TRIANGULAR)

A total of one (1) extinguisher/air bottle/storage compartments will be provided right side rear fender panel. The triangular shaped compartment will be sized to fit a 8.00" diameter extinguisher in the lower area and a 8.00" diameter extinguisher in the upper area. The compartment will be approximately 25.50" deep. A partition will be provided to separate the compartment. Also inside the compartment, black Dura-Surf friction reducing material will be provided. The compartment will be furnished with a drain hole. A brushed stainless steel, triangular shaped door with a Southco raised trigger C2 chrome lever latch will be provided to contain the air bottles. The door will have a flanged edge along the top, bottom, and side opposite the hinge. The side that is hinged as well as the side that is curved cannot be flanged. A dielectric barrier will be provided between the door hinge, hinge fasteners and the body sheet metal.

Air Bottle Compartment Strap

A strap will be provided in the air bottle compartment to help contain the air bottle when the vehicle is parked on an incline. The strap will wrap around the neck and attach to the wall of the compartment.

AIR BOTTLE STORAGE (SINGLE)

A quantity of one air bottle compartment, approximately 7.50" wide x 7.50" tall x 26.00" deep, will be provided on the driver side rearward of the rear wheels. The triangular door will cover the air bottle opening, the DEF tank access, and fuel fill. The compartment will be square with angled corners. A brushed stainless steel door with a Southco raised trigger C2 chrome lever latch will be provided to contain the air bottle. The door will have a flanged edge along the top, bottom, and side opposite the hinge. The side that is hinged as well as the side that is curved cannot be flanged. A dielectric barrier will be provided between the door hinge, hinge fasteners and the body sheet metal.

Inside the compartment, black Dura-Surf friction reducing material will be provided.

AIR BOTTLE COMPARTMENT STRAP

A strap will be provided in the air bottle compartment to help contain the air bottle when the vehicle is parked on an incline. The strap will wrap around the neck and attach to the wall of the compartment.

AIR BOTTLE STORAGE (TRIPLE)

A quantity of two (2) air bottle compartments designed to hold (3) air bottles up to 7.25" in diameter x 26.00" deep will be provided on the left side forward of the rear wheels and on the right side forward of the rear wheels. A brushed stainless steel door with a Southco raised trigger C2 chrome lever latch will be provided to contain the air bottle. The door will have a flanged edge along the top, bottom, and the straight edge of the side opposite the hinge. The side that is hinged as well as the side that is curved cannot be flanged. A dielectric barrier will be provided between the door hinge, hinge fasteners and the body sheet metal.

Inside the compartment, black Dura-Surf friction reducing material will be provided.

AIR BOTTLE COMPARTMENT STRAP

A strap will be provided in the air bottle compartment(s) to help contain the air bottles when the vehicle is parked on an incline. The strap will wrap around the neck and attach to the wall of the compartment.

AIR BOTTLE HOLDERS

Four (4) brackets will be provided for mounting air bottles. Each bracket will be a Ziamatic, model UH-6-30-3-SF, be mounted on tracks, and be used for adjusting the location of the bracket within the compartment. Install one in RS3 (left of partition) and three in RS4..

EXTENSION LADDER

There will be a 24' two-section aluminum Duo-Safety Series 900-A extension ladder provided.

ROOF LADDER

There will be a 14' aluminum Duo-Safety Series 775-A roof ladder provided.

HYDRAULIC LADDER RACK

Ground ladders will be mounted above the right side of the hose body in a specially designed swing-down cradle. This cradle will be electric/hydraulic operated. The system design will have been life cycle tested for dependable service.

An independent hydraulic pump powered by a 12-volt electric motor will operate the hydraulics. Operation of the hydraulic system for the ladder rack by an engine-powered pump will be totally unacceptable. The hydraulic pump and reservoir will be accessible from the ground through a stainless steel inspection door.

The ladder rack will incorporate two hydraulic rotary actuators, one each located inside the front compartment and the rear compartment. The actuators will be completely enclosed within each compartment to eliminate any pinch points while operating the ladder rack. Lifting arms will be attached outside the compartment body to the front and rear actuator. A center-lifting arm built into the compartment space is unnecessary and is unacceptable.

The rack can be designed in certain situations to provide lifting capabilities up to 500lbs.

The maximum height of the rack from the ground in the lowered position will be no more than 47.00".

The electric control panel will have a master switch on/off switch, an actuation switch, an operation indicator light and operation instructions. The electric controls will be located at the pump panel adjacent to the ladder rack in such a manner to allow the operator full view of the area into which the ladders will be lowered.

Two (2) air operated safety locks will be furnished to securely maintain the ladder bracket assembly in the travel position. These air operated safety locks will be controlled from the ladder rack control panel. A position switch will be installed to indicate when the safety locks are not in the locked position. This position switch will be tied into the "Do Not Move Apparatus" circuit.

A polished stainless steel enclosure shall be provided over the hydraulic ladder rack locks at the front and the rear on the right side to cover the ladder rack locks (2) and provide mounting for any rear warning lights.

Ladders will be secured to the brackets with two (2) locks retaining the roof ladder and the extension ladder. The locks will be such that when the roof ladder is removed, the clamps can be moved a half turn to hold the extension ladder in place. The roof ladder is mounted outboard of the extension ladder in this arrangement. The fly section of the extension ladder will be oriented inboard.

LADDER RACK INTERLOCK AND NOT STOWED INDICATOR LIGHT & ALARM

An interlock will be provided to prevent operation of the ladder rack unless the apparatus parking brake has been activated.

A steady red indicator light will be located on the cab instrument panel and illuminated when the hydraulic ladder rack is not in the stowed position, or if the air operated safety locks are not in the locked position. The light will be labeled "Ladder Rack". In addition, the "Do Not Move Apparatus" light located in the cab will be activated, and an audible alarm will sound when the hydraulic ladder rack is not in the stowed position, or if the air operated safety locks are not in the locked position.

ATTIC LADDER MOUNTING

A Duo-Safety 701 10' attic ladder will be mounted to the top of the bright aluminum treadplate hose bed cover on the left side. The compartment will be fabricated of bright aluminum treadplate and will have a bright aluminum treadplate drop down door at the rear with a D-handle latch.

HYDRAULIC LADDER RACK DEPLOYED LIGHTS

There will be two (2) Truck-Lite catalog number 15***, 1.20" high x 2.49" wide x 0.94" deep lights with chrome trim, red flashing LEDs and provided per the following:

- One (1) light installed on the front of the hydraulic ladder rack
- One (1) light installed on the rear of the hydraulic ladder rack
- The warning light lens colors to be the same as the LEDs

The lights will be activated when the battery switch is on and the hydraulic ladder rack is not in the stowed position.

FOLDING LADDER

One (1) 10' aluminum Series 585-A Duo-Safety folding ladder will be provided. The folding ladder will be installed outboard of ladders, above the main structural tube of the ladder rack and will match same mount location as what was provided on job 35616, mounted with an aluminum trough painted job color on the exterior and unpainted on the interior.

A pin with cable will be provided to hold the ladder in the trough.

ATTIC LADDER

One (1) 10' aluminum Series 701 Fresno ladder will be installed inside an aluminum treadplate compartment, located on top of the left side hosebed cover .

The rear hydraulic rack arm will have an offset to not block the rear upper zone warning lights. The offset required will be larger than standard to accommodate the lights picked.

HYDRAULIC LADDER RACK PUMP LOCATION

The hydraulic pump for the ladder rack will be located behind the passenger side pump panel. An access door will be provided to fill the pump.

BACKBOARD STORAGE

Storage for one (1) backboard will be provided in a tunnel through the water tank and accessed at the rear on the right side. The backboard will be stored horizontally in the tunnel. The tunnel will be sized for a backboard 72.00" long x 18.00" wide x 2.00" high.

Access to the backboard will be through a smooth aluminum door with a Southco C2 chrome flush latch. The door will be hinged on the bottom.

The tunnel will extend to within a few inches of the rear wall. The gap between the rear wall and tunnel will be enclosed with a rubber seal.

10' PIKE POLE

One (1) pike pole Fire Hooks Unlimited, Model RH-10, 10' long roof hook with a steel handle will be provided and located hydraulic ladder rack.

6' PIKE POLE

Two (2) pike poles, Fire Hooks Unlimited, Model UHST-6 Universal style hook with steel pole and gas shutoff end will be provided and located on the rear cab wall, one (1) each side.

6' PIKE POLE PROVIDED BY FIRE DEPARTMENT

The pike pole is not on the apparatus as manufactured. The fire department will provide and mount the pike poles.

There will be one (1) 6' pike pole(s) provided. The pike pole(s) will be a Nupla 6' roof vent rubbish hook with D handle.

PIKE POLE STORAGE

Aluminum tubing will be used for the storage of one (1) pike pole and will be located on top of the inboard hydraulic ladder rack beam. If the head of a pike pole can come in contact with a painted surface, a stainless steel scuffplate will be provided.

PIKE POLE STORAGEZ

There will be one (1) set(s) of South Park Corporations Model# FBP58Z02C-S Plastisol (Rubber) covered tulip clips for mounting of pike pole(s). Size and mounting location will be on top of the driver side catwalk, centered side to side. First bracket to be 13.00" from the front of the body. Second bracket to be 42.00" rearward from the first bracket.

FOLDING STEPS FRONT OF BODY

Cast Products, model SP6610, folding steps will be provided full height on the left side and one (1) step on the right side body compartments to provide access to the cargo bed. Steps will be spaced evenly on the sales drawing. Actual quantity may vary due to pump panel interferences but will meet the NFPA required maximum stepping height.

The steps will incorporate an LED light to illuminate the stepping surface.

The steps can be used as a hand hold with an opening wide enough for a gloved hand.

The Pierce logo will be provided in the underside of the step.

REAR STEPS

Bright aluminum treadplate corner steps will be provided at the rear. All steps will provide adequate surface for stepping.

PUMP COMPARTMENT

The pump compartment will be separate from the hose body and compartments so that each may flex independently of the other. The pump compartment will be constructed of the same material as the body compartmentation.

The pump compartment substructure will be a fabricated assembly of steel tubing, angles and channels which supports both the fire pump and the side running boards.

The pump compartment will be mounted on the chassis frame rails with rubber biscuits in a four point pattern to allow for chassis frame twist.

Pump compartment, pump, plumbing and gauge panels will be removable from the chassis in a single assembly.

PUMP MOUNTING

Pump will be mounted to a substructure which will be mounted to the chassis frame rail using rubber isolators. The mounting will allow chassis frame rails to flex independently without damage to the fire pump.

LEFT SIDE PUMP CONTROL PANELS

All pump controls and gauges will be located at the left side of the apparatus and properly identified.

Layout of the pump control panel will be ergonomically efficient and systematically organized.

The pump operator's control panel will be removable in two (2) main sections for ease of maintenance:

The upper section will contain sub panels for the mounting of the pump pressure control device, engine monitoring gauges, electrical switches, and foam controls (if applicable). Sub panels will be removable from the face of the pump panel for ease of maintenance. Below the sub panels will be located all valve controls and line pressure gauges.

The lower section of the panel will contain all inlets, outlets, and drains.

All push/pull valve controls will have 1/4 turn locking control rods with polished chrome plated zinc tee handles. Guides for the push/pull control rods will be chrome plated zinc castings securely mounted to the pump panel. Push/pull valve controls will be capable of locking in any position. The control rods will pull straight out of the panel and will be equipped with universal joints to eliminate binding.

IDENTIFICATION TAGS

The identification tag for each valve control will be recessed in the face of the tee handle.

All discharge outlets will have color coded identification tags, with each discharge having its own unique color. Color coding will include the labeling of the outlet and the drain for each corresponding discharge.

All line pressure gauges will be mounted directly above the corresponding discharge control tee handles and recessed within the same chrome plated casting as the rod guide for quick identification. The gauge and rod guide casting will be removable from the face of the pump panel for ease of maintenance. The casting will be color coded to correspond with the discharge identification tag.

All remaining identification tags will be mounted on the pump panel in chrome plated bezels.

The pump panel on the right side will be removable with lift and turn type fasteners.

Trim rings will be installed around all inlets and outlets.

The trim rings for the side discharge outlets will be color coded and labeled to correspond with the discharge identification tag.

DELUGE CONTROLLER COMPARTMENT IN CARGO AREA

An aluminum treadplate compartment will be installed over the electric deluge outlet valve controller in the cargo area. An access door with a lift and turn latch will be provided.

SIDESHEETS, PUMPHOUSE

The side sheet over the pump house will be raised to conceal the equipment stored in the cargo compartment or to align with the top of the body.

MIDSHIP FIRE PUMP

Midship fire pump will be a Hale QMAX-150, 1500 gpm single (1) stage midship mounted centrifugal type.

Pump will be the class "A" type.

Pump will deliver the percentage of rated discharges at the pressures indicated below:

- 100% of rated capacity at 150 psi net pump pressure.

- 100% of rated capacity at 165 psi net pump pressure.

-70% of rated capacity at 200 psi net pump pressure.

-50% of rated capacity at 250 psi net pump pressure.

Entire pump and both suction and discharge passages will be hydrostatically tested to a pressure of 500 psi.

Pump will be fully tested at the pump manufacturer's factory to the performance requirements as outlined by the current edition of applicable NFPA standards and will be free from objectionable pulsation and vibration.

Pump body and related parts will be of fine grain, alloy cast iron with a minimum tensile strength of 30,000 psi (2041.2 bar).

All moving parts in contact with water will be of high quality bronze or stainless steel.

Pump body will be horizontally split, on a single plane in two (2) sections, for easy removal of entire impeller assembly, including wear rings and bearings from beneath the pump, without disturbing pump piping or the mounting of the pump in the chassis.

Pump will have one (1) double suction impeller. The pump body will have two (2) opposed discharge volute cutwaters to eliminate radial unbalance.

Pump impeller will be hard, fine grain bronze of the mixed flow design, accurately machined, hand-ground, and individually balanced. The vanes of the impeller intake eyes will be hand-ground and polished to a sharp edge. They will be of sufficient size and design to provide ample reserve capacity utilizing minimum horsepower.

Impeller clearance rings will be bronze and easily renewable without replacing impeller or pump volute body. They will be of the wrap-around double labyrinth design for maximum efficiency. Pump shaft will be electric furnace heat-treated, corrosion resistant stainless steel. It will be super-finished under packing with galvanic corrosion (zinc separators in packing) protection for longer shaft life. Pump shaft will be sealed with double oil seal to keep road dirt and water out of drive unit.

Pump shaft will be rigidly supported by three (3) bearings for minimum deflection. A high lead bronze sleeve bearing will be located immediately adjacent to the impeller (on the side opposite of the drive unit). The sleeve bearing will be automatically oil lubricated and pressure balanced to exclude foreign material. The remaining bearings will be heavy-duty, deep groove ball bearings in the gearbox and will be splash lubricated.

MECHANICAL SEAL ON PUMP

Only one (1) mechanical seal will be used on the suction (inboard) side of the pump. The mechanical seal will be 2.00" in diameter and will be spring loaded, maintenance-free, and self-adjusting.

The mechanical seal construction will be a carbon sealing ring, stainless steel coil spring, Viton® rubber boot, and a tungsten carbide seat with a Teflon backup seal.

PUMP TRANSMISSION

The drive unit will be cast and completely manufactured and tested at the Hale Products, Inc. factory. The pump drive unit will be of sufficient size to withstand up to 16,000 foot/ pounds of torque from the engine in both the road and pump operating conditions. The drive unit is will be designed with ample lubrication reserve to maintain the proper operating temperature.

The gearbox drive shafts will be of heat treated chrome nickel steel and 2.75" in diameter on both the input and output drive shafts. They will be designed to withstand the full torque of the engine in both road and pump operating conditions.

All gears, both drive and pump, will be of the highest quality, electric furnace, chrome nickel steel. Bores will be ground to size and teeth integrated, crown-shaved and hardened, to give an extremely accurate gear for long life, smooth, quiet running and higher load carrying capability. An accurately cut spur design will be provided to eliminate all possible end thrust.

Pierce Manufacturing will select the pump ratio to provide the maximum performance with the engine and transmission selected. Three (3) green warning lights will be provided to indicate to the operator(s) when the pump has completed the shift from Road to Pump position. Two (2) lights will be located in the truck driving compartment and one (1) light on pump operator's panel adjacent to the throttle control.

PUMPING MODE

An interlock system will be provided to ensure that the pump drive system components are properly engaged so that the apparatus can be safely operated. The interlock system will be designed to allow stationary pumping only.

AIR PUMP SHIFT

Pump shift engagement will be made by a two (2) position sliding collar, actuated pneumatically (by air pressure), with a three (3) position air control switch located to the left of the steering column. A manual back-up shift control will also be located on the left side pump panel.

Two (2) indicator lights will be provided adjacent to the pump shift inside the cab. One (1) green light will indicate the pump shift has been completed and be labeled "pump engaged". The second green light will indicate when the pump has been engaged and the chassis transmission is in pump gear. This indicator light will be labeled "OK to pump".

The pump shift will be interlocked to prevent the pump from being shifted out of gear when the chassis transmission is in gear to meet NFPA requirements.

The pump shift control in the cab will be illuminated to meet NFPA requirements.

TRANSMISSION LOCK-UP
The direct gear transmission lock-up for the fire pump operation will engage automatically when the pump shift control in the cab is activated.

AUXILIARY COOLING SYSTEM
A supplementary heat exchange cooling system will be provided to allow the use of water from the discharge side of the pump for cooling the engine water. The heat exchanger will be a separate unit. It will be installed in the pump or engine compartment with the control located on the pump operator's control panel. The exchanger will be plumbed to the master drain valve.

PUMP INTAKE RELIEF VALVE
An Akron Style 53 relief valve will be installed on the suction side of the pump preset at 125 psig.

The relief valve will have a working range of 50 psi to 250 psi.

The outlet will terminate below the frame rails with a 2.50" National Standard hose thread adapter and will have a "do not cap" warning tag.

The relief valve pressure control will be located behind the right side pump panel with a stainless steel access door.

PRESSURE CONTROLLER
A Fire Research, TOTAL CONTROL Model TCA100 series of pressure governor will be provided.

A pressure transducer will be installed in the water discharge manifold on the pump.

The display panel will be located at the pump operator's panel.

PRIMING PUMP
The priming pump will be a Trident Emergency Products compressed air powered, high efficiency, multistage venturi based AirPrime System, conforming to standards outlined in the current edition of applicable NFPA standards.

All wetted metallic parts of the priming system are to be of brass and stainless steel construction.

One (1) priming control will open the priming valve and start the pump primer.

RECIRCULATING LINE WITH CHECK VALVE
A 0.50" diameter recirculating line, from the pump to the water tank, will be furnished with a control installed at the pump operator's control panel. A check valve will be provided in this line to prevent the back flow of water from the tank to the pump if the valve is left in the open position.

PUMP SHIFT CABLE ROUTING
The manual pump shift cable will mount reward of the left side running board hose tray, recessed inward as far as possible.

PUMP MANUALS

There will be a total of two (2) pump manuals provided by the pump manufacturer and furnished with the apparatus. The manuals will be provided by the pump manufacturer in the form of two (2) electronic copies. Each manual will cover pump operation, maintenance, and parts.

PLUMBING, STAINLESS STEEL AND HOSE

All inlet and outlet lines will be plumbed with either stainless steel pipe, flexible polypropylene tubing or synthetic rubber hose reinforced with hi-tensile polyester braid. All hose's will be equipped with brass or stainless steel couplings. All stainless steel hard plumbing will be a minimum of a schedule 10 wall thickness.

Where vibration or chassis flexing may damage or loosen piping or where a coupling is required for servicing, the piping will be equipped with victaulic or rubber couplings.

Plumbing manifold bodies will be ductile cast iron or stainless steel.

All piping lines are to be drained through a master drain valve or will be equipped with individual drain valves. All drain lines will be extended with a hose to drain below the chassis frame.

All water carrying gauge lines will be of flexible polypropylene tubing.

All piping, hose and fittings will have a minimum of a 500 PSI hydrodynamic pressure rating.

FOAM SYSTEM PLUMBING

All piping that is in contact with the foam concentrate or foam/water solution will be stainless steel. The fittings will be stainless steel or brass. Cast iron pump manifolds will be allowed.

MAIN PUMP INLETS

A 6.00" pump manifold inlet will be provided on each side of the vehicle. The suction inlets will include removable die cast zinc screens that are designed to provide cathodic protection for the pump, thus reducing corrosion in the pump.

SHORT SUCTION TUBE(S)

The suction tube(s) on the water pump will have short suction tube(s) installed to allow for installation of adapters, elbows or intake valves without excessive overhang.

INLET VALVE/DUMP

One (1) butterfly valve type Hale MIV 2.0 will be provided on the left side main pump inlet. The inlet valve will be a combination butterfly valve and pressure relief valve with a Hale bleeder valve. The pressure relief valve will have a range of 75 to 250 PSI and will be factory set to 150 psig . The valve, less relief valve, will be rated for 600 PSI hydrostatic pressure and 26 inHg of vacuum. The bleeder valve will be located near the valve control.

The valve will be fully recessed behind the pump panel and will be operated by an electric 12 VDC motor. A control panel with the electric switch and indicator lights will be provided on the pump operator's panel.

A manual override handwheel will be provided next to the inlet valve on the side pump panels.

INLET VALVE/DUMP

One (1) butterfly valve type Hale MIV 2.0 will be provided on the right side main pump inlet. The inlet valve will be a combination butterfly valve and pressure relief valve with a Hale bleeder valve. The pressure relief valve will have a range of 75 to 250 PSI and will be factory set to 150 psig . The valve, less relief valve, will be rated for 600 PSI of hydrostatic pressure and 26 inHg of vacuum. The bleeder valve controls will be located at the threaded connection and at the right side pump panel.

The valve will be fully recessed behind the pump panel and will be operated by an electric 12 VDC motor. A control panel with the electric switch and two (2) status indicator lights will be provided on the right side pump panel.

A manual override handwheel will be provided next to the inlet valve on the side pump panels.

MAIN PUMP INLET CAP PROVIDED BY FIRE DEPARTMENT

NFPA 1900, 2024 edition, section 13.6.8 and CAN/ULC S515:2024 edition, section 5.2, requires all intakes to be provided with caps or closures capable of withstanding a hydrostatic gauge pressure of 500 psi (3400 kPa).

The caps are not on the apparatus as manufactured. The fire department will provide both caps for the main pump inlets.

VALVES

All ball valves will be Akron® Brass. The Akron valves will be the 8000 series heavy-duty style with a stainless steel ball and a simple two-seat design. No lubrication or regular maintenance is required on the valve.

Valves will have a **ten (10) year** warranty.

The location of the valve for the one (1) inlet will be recessed behind the pump panel.

INLET CONTROL

The side auxiliary inlet(s) will incorporate a quarter-turn ball valve with the control located at the inlet valve. The valve operating mechanism will indicate the position of the valve.

LEFT SIDE INLET

There will be one (1) auxiliary inlet with a 2.50" valve at the left side pump panel, terminating with a 2.50" (F) National Standard hose thread adapter.

The auxiliary inlet will be provided with a strainer, chrome swivel and plug.

RIGHT SIDE INLET

There will be one (1) auxiliary inlet with a 2.50" valve at the right side pump panel, terminating with a 2.50" (F) National Standard hose thread adapter.

The auxiliary inlet will be provided with a strainer, chrome swivel and plug.

ADAPTER, INLET
Two (2) adapters for the inlets will be furnished for the left and right main pump inlet with 6.00" female NST threads converting to 4.00" Storz. A 4.00" Storz cap will be provided to match the adapter.

INLET BLEEDER VALVE
A 0.75" bleeder valve will be provided for each side gated inlet.

The valves will be located behind the panel with a "T" swing style handle control extended to the outside of the panel.

The handles will be chrome plated and provide a visual indication of valve position. The swing handle will provide an ergonomic position for operating the valve without twisting the wrist and provides excellent leverage.

The water discharged by the bleeders will be routed below the chassis frame rails.

No snubber bleeder valves are acceptable.

TANK TO PUMP
The booster tank will be connected to the intake side of the pump with heavy-duty piping and a quarter turn 3.00" full flow line valve, with an air control remotely located at the operator's panel. A red indicator light will be provided to show the closed position of the valve. A green indicator light will be provided to show the open position of the valve.

The tank to pump line will run straight (no elbows) from the pump into the front face of the water tank and angle down into the tank sump. A rubber coupling will be included in this line to prevent damage from vibration or chassis flexing.

A check valve will be provided in the tank to pump supply line to prevent the possibility of "back filling" the water tank.

TANK REFILL
A 1.50" combination tank refill and pump re-circulation line will be provided, using a quarter-turn full flow ball valve controlled from the pump operator's panel.

DISCHARGE OUTLET CONTROLS
The discharge outlets will incorporate a quarter-turn ball valve with the control located at the pump operator's panel. The valve operating mechanism will indicate the position of the valve.

If a handwheel control valve is used, the control will be a minimum of a 3.90" diameter stainless steel handwheel with a dial position indicator built into the center of the handwheel.

Any 3.00 inch or larger discharge valve will be a slow-operating valve to meet current edition of applicable NFPA standards.

LEFT SIDE DISCHARGE OUTLETS
There will be Two (2) discharge outlets with a 2.50" valve on the left side of the apparatus, controlled by an Akron locking horizontal swing style control, terminating with a 2.50" (M) National Standard hose thread adapter. The controls will be Akron SZ handles

LEFT SIDE OUTLET ELBOWS
The 2.50" discharge outlets located on the left side pump panel will be furnished with a 2.50" (F) National Standard hose thread x 2.50" (M) National Standard hose thread, chrome plated, 45 degree elbow.

The elbow will be Pierce VLH, which incorporates an exclusive thread design to automatically relieve stored pressure in the line when disconnected.

RIGHT SIDE DISCHARGE OUTLETS
There will be two (2) right side outlets with 2.50" valves on the right side of the apparatus, terminating with a 2.50" (M) National Standard hose thread adapter.

Each outlet will have two (2) vertical swing handle controls one (1) at each pump panel. Moving the control on either side will also move the control handle on the opposite side of the truck.

A pressure gauge will not be required on the right side panel.

RIGHT SIDE OUTLET ELBOWS
The 2.50" discharge outlets located on the right side pump panel will be furnished with a 2.50" (F) National Standard hose thread x 2.50" (M) National Standard hose thread, chrome plated, 45 degree elbow.

The elbow will be Pierce VLH, which incorporates an exclusive thread design to automatically relieve stored pressure in the line when disconnected.

LARGE DIAMETER DISCHARGE OUTLET
There will be an Akron 8800 4.00" flat ball valve with 4.00" plumbing terminating with a 4.00" MNST chrome adapter on the right side pump panel.

The valve will be controlled with a(n) Akron 9327 with an analog pressure gauge located at the pump operator's panel.

LARGE DIAMETER OUTLET ELBOWS
The 4.00" outlet will be furnished with a 4.00" (F) National Standard hose thread x 4.00" Storz elbow adapter with Storz cap and stainless steel tie cable.

REAR DISCHARGE OUTLET
There will be One (1) discharge outlet piped to the rear of the hose bed, center, installed so proper clearance is provided for spanner wrenches or adapters. Plumbing will consist of 2.50" piping along with a 2.50" full flow ball valve with the control from the pump operator's panel.

REAR OUTLET ELBOWS PROVIDED BY FIRE DEPARTMENT

NFPA 1900, 2024 edition, section 13.7.7 requires any 2.00" or larger discharge outlet that is located more than 42.00" off the ground and to which hose is to be connected and that is not in a hose storage area will be supplied with a sweep elbow of at least 30 degrees downward.

NFPA 1900, 2024 edition, section 13.7.4 requires all discharge outlet connections, except connections to which a hose will be pre-connected, will be equipped with caps or closures capable of withstanding a hydrostatic gauge pressure of 100 psi over the maximum pump close-off pressure or 500 psi, whichever is greater.

The elbow(s) and cap are not on the apparatus as manufactured. The fire department will provide the elbow(s) and cap.

DISCHARGE OUTLET (REAR)

There will be Two (2) discharge outlets piped to the rear of the hose bed. One (1) on the driver's side and one (1) on the passenger side. Proper clearance will be provided for spanner wrenches or adapters. Plumbing will consist of 2.00" piping along with a 2.00" full flow ball valve with the control from the pump operator's panel. The Two (2) discharge outlets will terminate with a 1.50" male National Standard hose thread male adapter.

DISCHARGECAPS/ INLET PLUGS

Chrome plated, rocker lug, caps with stainless steel cable will be furnished for all discharge outlets 1.00" thru 3.00" in size, besides the pre-connected hose outlets.

Chrome plated, rocker lug, plugs with stainless steel cable will be furnished for all auxiliary inlets 1.00" thru 3.00" in size.

All of the caps and plugs will be furnished with special threads to match the adapters or elbows used on the truck.

The caps and plugs will incorporate a thread design to automatically relieve stored pressure in the line when disconnected.

OUTLET BLEEDER VALVE

A 0.75" bleeder valve will be provided for each outlet 1.50" or larger. Automatic drain valves are acceptable with some outlets if deemed appropriate with the application.

The valves will be located behind the panel with a T swing style handle control extended to the outside of the side pump panel.

The handles will be chrome plated and provide a visual indication of valve position.

The T swing handle will provide an ergonomic position for operating the valve without twisting the wrist and provides excellent leverage.

Bleeders will be located at the bottom of the pump panel. They will be properly labeled identifying the discharge they are plumbed in to.

The water discharged by the bleeders will be routed below the chassis frame rails.

No snubber drain valves are acceptable.

DISCHARGE DRAIN VALVES
Provide a manual style drain in all low plumbing points that would normally have automatic drains.

DELUGE RISER
A 3.00" deluge riser will be installed above the pump in such a manner that a monitor can be mounted and used effectively. Piping will be installed securely so no movement develops when the line is charged. This outlet will be located in the cargo area.

The riser will be gated with an electrically actuated 3.00" valve. The valve will be controlled by two (2) Akron 9345 electric valve controllers with pressure reading. One (1) will be provided on the pump operators panel and one (1) will be located near the deluge riser in the cargo area. The electric controls must be of a true position feedback design, requiring no clutches in the motor or current limiting. The units must be completely sealed with momentary open, close as well and an optional one touch full open feature to operate the valve actuator. The controllers will provide position indication on a full color, backlit LCD display. They will have manual adjustment of the brightness as well as an auto dimming option.

TELESCOPIC PIPING
The deluge riser piping will include a manual Task Force Tips XG18 extend-a-gun extension. This extension will be telescopic to allow the deluge gun to be raised 18.00" increasing the range of operation.

A position sensor will be provided on the telescopic piping that will activate the "do not move vehicle" light inside the cab when the monitor is in the raised position.

MONITOR
An Akron Model 3416 monitor will be properly installed on the deluge riser. The monitor will include both a fixed mounting base and a portable base with one (1) 4.00" Storz inlet.

The monitor will be painted to match the body.

NOZZLE, DELUGE
Akron model 3488 stream shaper, Akron model 1755 Turbomaster master stream nozzle and Akron model 2499 quad stacked tips will be provided.

The deluge riser will have male National Pipe Threads for mounting the monitor.

CROSSLAY HOSE BEDS

Two (2) crosslays with 1.50" outlets will be provided. Each bed to be capable of carrying 200' of 1.75" double jacketed hose and will be plumbed with 2.00" i.d. pipe and gated with a 2.00" quarter turn ball valve.

Outlets to be equipped with a 1.50" National Standard hose thread 90 degree swivel located in the hose bed so that hose may be removed from either side of apparatus.

The crosslay controls will be at the pump operator's panel.

The center crosslay dividers will be fabricated of 0.25" aluminum and will provide adjustment from side to side. The divider will be unpainted with a brushed finish.

Vertical scuffplates constructed of polished stainless steel will be provided at the front and rear ends of the bed on each side of vehicle.

Crosslay bed flooring will consist of removable perforated brushed aluminum.

CROSSLAY/DEADLAY HOSE RESTRAINT

There will be black vinyl end flap provided across each end of two (2) crosslay/deadlay opening(s) to secure the hose during travel. Each vinyl end flap will be attached to the cover with quarter-turn fasteners. They will be attached with seatbelt fasteners with at the bottom. The seat belt buckles will have 4" of adjustment in the straps.

CROSSLAY COVER

A hinged .19" aluminum treadplate cover will be installed over the crosslay hose beds. It will include a latch at each end of the cover to hold it securely in place, a chrome grab handle at each end for opening and closing the cover and a foam rubber gasket where the cover comes into contact to a painted surface.

The cover will be provided with rubber latch hold open device.

The hinge will be to the front of the hose beds.

BOOSTER HOSE REEL

A Hannay electric rewind booster hose reel will be installed over the pump in a recessed open compartment on the right side of the apparatus. The reel will be fabricated of aluminum and have highly polished end discs.

A polished stainless steel roller and guide assembly will be mounted on the reel side of the apparatus.

Discharge control will be provided at the pump operator's panel. Plumbing to the reel will consist of 1.50" Aeroquip hose and a 1.50" valve.

Reel motor will be protected from overload with a circuit breaker rated to match the motor.

Two (2) electric rewind control switches will be provided, one (1) installed on each pump panel.

Booster hose, .75" in diameter and 200' in length, with chrome plated Barway or equal couplings will be provided.

The working pressure of the booster hose will be a minimum of 800 psi.

Capacity of the hose reel will be 200 feet of .75" booster hose.

There will be one (1) additional polished stainless steel roller and guide assembly mounted left side cargo side sheet.

FOAM PROPORTIONER

A foam proportioning system will be provided that is an on demand, automatic proportioning, single point, direct injection system suitable for all types of Class A and B foam concentrates, including the high viscosity (6000 cps), alcohol resistant Class B foams. Operations will be based on direct measurement of water flow and remain consistent within the specified flows and pressures. The system will automatically proportion foam at rates from 0.1 percent to 3 percent regardless of variations in water pressure and flow, up to the maximum rated capacity of the foam concentrate pump.

The design of the system will allow operation from draft, hydrant, or relay operation.

System capacity

The system will have the ability to deliver the following minimum foam solution flow rates at accuracies that meet or exceed NFPA requirements at a pump rating of 150 psi.

- 100 gpm @ 3 percent
- 300 gpm @ 1 percent
- 600 gpm @ 0.5 percent

Class A foam setting in 0.1 percent increments from 0.1 percent to 3 percent. Typical settings of 1 percent, 0.5 percent and 0.3 percent (maximum capacity will be limited to the plumbing and water pump capacity).

The percentage of injection will have a preset. This preset can be changed by the end user as desired. The percentage of foam injected will be changed through the display screen.

Hydraulic Drive System

The foam concentrate pump will be powered by an electric over hydraulic drive system. The hydraulic system and motor will be integrated into one (1) unit.

Foam Concentrate Pump

The foam concentrate pump will be of positive displacement, self-priming; linear actuated design, driven by the hydraulic system. The pump will be constructed of brass body; chrome plated stainless steel shaft, with a stainless-steel piston.

A relief system is provided to protect the drive system components and prevent over pressurizing of the foam concentrate pump.

One (1) check valve will be installed in the foam discharge plumbing to prevent foam from contaminating the water pump.

The foam concentrate pump will have minimum capacity for 3 gpm with all types of foam concentrates with a viscosity at or below 6000 cps including protein, fluor protein, AFFF, FFFP, or AR-AFFF. The system will deliver only the amount of foam concentrate flow required, without recirculating foam back to the storage tank. Recirculating foam concentrates back to the storage tank can cause agitation and premature foaming of the concentrate resulting in system failure. The foam concentrate pump will be self-priming with the ability to draw foam concentrate from external sources, such as drums or pails.

Control System

Control System

The system will be equipped with an LCD display located on the pump operator's panel and a control. Both the display and control will use a can network. The display will use a USB interface for software updates. The LCD display will have adjustment for screen brightness.

The control will house a microprocessor, which receives input from the systems water flow meter while also monitoring the position of the foam concentrate pump. The microprocessor will compare the values of the water flow versus the position/rate of the foam pump, to ensure the proportion rate is accurate.

Push button controls will be integrated into the LCD control for.

- System On/Off
- Foam Percentage Control
- Foam Pump Prime
- Paddle Wheel Auto/Manual Mode

The LCD control will display

- Foam Pump Stroke Position
- Foam Inject Percentage
- Tank or Draft Mode Selection
- Foam Tank Low Level
- Inject/Fill Mode Selection
- Tank Refill

The display will have access to menu options for calibration and diagnostic needs.

External Foam Concentrate Connection

A 0.75" male connection GHT (garden hose thread) external foam pick-up will be provided on the pump panel to enable use of a foam agent that is not stored on the vehicle. The external foam pick-up will be designed to allow continued operation after the on-board foam tank is empty, or the use of foam which is different than that stored in the foam tank.

Panel mounted valved manifold
A valved manifold (with an instruction plaque) will be mounted to the pump panel. The valved manifold will function as the foam system draft/tank foam inject source and inject/foam tank fill mode.

Pick-up hose
A 0.75" flexible hose with an end for insertion into foam containers will be provided. The hose will be supplied with a 0.75" female swivel GHT (garden hose thread) swivel connector. The hose will be shipped loose.

Discharges
The foam system will be plumbed to center rear outlet, hose reel in right side of dunnage area, left rear outlet, right rear outlet, front crosslay and rear crosslay discharge(s).

System Electrical Load
The maximum current draw of the electric motor and system will be no more than 55 amperes at 12 VDC.

SINGLE FOAM TANK REFILL
The foam system's proportioning pump will be used to fill the foam tank. This will allow use of the auxiliary foam pick-up to pump the foam from pails or a drum on the ground into the foam tank. A foam shut-off switch will be installed in the fill dome of the tank to shut the system down when the tank is full. The fill operation will be controlled by a mode in the foam system controller. While the proportioner pump is filling the tank, the controller that the tank is filling. When the tank is full, as determined by the float switch in the tank dome, the pump will stop. If it attempted to use tank fill and the refill valve and suction valve are in the wrong position(s), the display will indicate the improper valve position(s). When the valves are positioned properly, then filling will commence.

FOAM TANK
The foam tank will be an integral portion of the polypropylene water tank. The cell will have a capacity of 30 gallons of foam with the intended use of Class A foam. The foam cell will not reduce the capacity of the water tank. The foam cell will have a screen in the fill dome and a breather in the lid.

FOAM TANK DRAIN
The foam tank drain will be a 1.00" quarter turn drain valve located inside the pump/plumbing compartment.

The following drawing(s) will be provided for approval by the customer. The drawing(s) will be made for up 38133 apparatus and/or similar Pierce job number.

PUMP OPERATOR'S PANEL DRAWING
A detailed drawing to scale of the pump operator's panel will be provided for the customer to review. The drawing will include all of the gauges, controls, switching, etc.., located on the pump operator's panel. The customer will be allowed to make changes and/or mark-ups to this approval drawing. The fire apparatus manufacturer will make revisions (If needed) to the drawing per the customer changes and/or mark-ups as long as the changes are physically possible within a specific product line.

The finalized and signed customer approved pump operator's panel drawing will become part of the contract documents.

Due to the way drain(s), bleeder(s), operational/maintenance tag(s) and NFPA required warning tag(s) are placed on pump panel(s), these items will NOT be shown on any pump panel approval drawing(s). These item(s) will be placed on pump panel(s) at the fire apparatus manufacturer discretion.

REMAINING PUMP PANEL(S)

Detailed drawing(s) to scale of the remaining pump panel(s) will be provided for the customer to review. The drawing(s) will include all of the gauges, controls, switching, etc.., located on the pump panel(s). The customer will be allowed to make changes and/or mark-ups to these approval drawing(s). The fire apparatus manufacturer will make revisions (If needed) to the drawing(s) per the customer changes and/or mark-ups as long as the changes are physically possible within a specific product line.

The finalized and signed customer approved pump panel drawing(s) will become part of the contract documents.

Due to the way drain(s), bleeder(s), operational/maintenance tag(s) and NFPA required warning tag(s) are placed on pump panel(s), these items will NOT be shown on any pump panel approval drawing(s). These item(s) will be placed on pump panel(s) at the fire apparatus manufacturer discretion.

COLOR CODED TAGS

A detailed drawing/chart of the colors used on all of the inlet(s) and outlet(s) will be provided for the customer to review. The customer will be allowed to make changes and/or mark-ups to this approval drawing/chart. The fire apparatus manufacturer will make revisions (If needed) to the drawing per the customer changes and/or mark-ups as long as the changes are physically possible within a specific product line.

The finalized and signed customer approved drawing/chart of the colors will become part of the contract documents.

SPECIAL TEXT/VERBIAGE TAGS

A detailed drawing/chart of the text/verbiage used on all of the inlet(s) and outlet(s) will be provided for the customer to review. The customer will be allowed to make changes and/or mark-ups to this approval drawing/chart. The fire apparatus manufacturer will make revisions (If needed) to the drawing per the customer changes and/or mark-ups as long as the changes are physically possible within a specific product line.

The finalized and signed customer approved drawing/chart of the text/verbiage will become part of the contract documents.

PUMP PANEL CONFIGURATION

The pump panel configuration will be arranged and installed in an organized manner that will provide user-friendly operation.

PUMP AND GAUGE PANEL
The pump and gauge panels will be constructed of stainless steel with a brushed finish. A polished aluminum trim molding will be provided on both sides of the pump panel.

PUMP ACCESS

Right Side Panel
The right side pump panel will be removable.

Panel Fastener
The right side removable panel will be secured using a chrome rasied trigger latch .

The left side pump panels will be attached with screws.

The right side lower panel (drain bank) will be secured using screws.

PUMP COMPARTMENT LIGHT
There will be one (1) Whelen®, Model 3SC0CDCR, 3.00" white 12 volt DC LED light(s) with Whelen, Model 3FLANGEC, flange(s) installed in the pump compartment.

Engine monitoring graduated LED indicators will be incorporated with the pressure controller.

Also provided at the pump panel will be the following:

- Master Pump Drain Control

THROTTLE READY GREEN INDICATOR LIGHT
There will be a green indicator light integrated with the pressure governor and/or engine throttle installed on the pump operators panel that is activated when the pump is in throttle ready mode.

OK TO PUMP INDICATOR LIGHT
There will be a green indicator light installed on the pump operators panel that is activated when the pump is in Ok To Pump mode.

COVER
There will be a polished stainless steel flip up cover with a hinge at the top edge for the pressure controller to minimize risk of damage. The hinge will hold the cover in the open position.

from top down- Panel lights, Left tele light, Front Scene, Left Scene, Right Scene, Rear Scene (match job 38133).

VACUUM AND PRESSURE GAUGES
The pump vacuum and pressure gauges will be liquid filled and manufactured by Innovative Controls.

The gauges will be a minimum of 6.00" in diameter and will have white faces with black markings, with a pressure range of 30.00" 0-400 psi.

The pump pressure and vacuum gauges will be installed adjacent to each other at the pump operator's control panel.

Test port connections will be provided at the pump operator's panel. One (1) will be connected to the intake side of the pump, and the other to the discharge manifold of the pump. They will have 0.25 in. standard pipe thread connections and polished stainless steel plugs. They will be marked with a label.

PRESSURE GAUGES

The individual "line" pressure gauges for the discharges will be interlube filled and manufactured by Class 1©.

They will be a minimum of 2.50" in diameter and the dial will have white faces with black markings.

Gauges will have a pressure rating of 0-400 psi.

The individual pressure gauge will be installed as close to the outlet control as practical.

WATER LEVEL GAUGE

A Fire Research TankVision Pro model WLA300-A00 water tank indicator gauge will be installed on the pump operator's panel. The gauge kit will include an electronic indicator module, a pressure sensor, and a 10' sensor cable. The gauge will show the volume of water in the tank on nine (9) easy to see super bright RGB LEDs. A wide view lens over the LEDs will provide for a viewing angle of 180 degrees. The gauge case will be waterproof, manufactured of Polycarbonate/Nylon material, and have a distinctive blue label.

The program features will be accessed from the front of the indicator module. The program will support self-diagnostics capabilities, self-calibration, six (6) programmable colored light patterns to display tank volume, adjustable brightness control levels and a data link to connect remote indicators. Low water warnings will include flashing LEDs at 1/4 tank and down chasing LEDs when the tank is almost empty.

The gauge will receive an input signal from an electronic pressure sensor. The sensor will be mounted from the outside of the water tank near the bottom. No probe will be placed on the interior of the tank. Wiring will be weather resistant and have automotive type plug-in connectors.

ADDITIONAL WATER LEVEL GAUGE(S)

There will be one (1) Fire Research TankVision Pro model WLA300-B00 water tank remote indicator kit(s) installed on the right side pump panel. The kit(s) will include an electronic indicator module and a 10' remote cable. The indicator(s) will show the volume of water in the tank on nine (9) easy to see super bright RGB LEDs. A wide view lens over the LEDs will provide for a viewing angle of 180 degrees. The indicator case will be waterproof, manufactured of Polycarbonate/Nylon material, and have a distinctive blue label.

The remote indicator(s) will receive input information over a data link from the primary Fire Research TankVision indicator. A 10' cable will be provided to connect the data link. The remote indicator(s) will have the same program as the primary so that the two indicators are interchangeable.

The flash rate will be determined by the main water tank sensor.

CLASS "A" FOAM LEVEL GAUGE

A Fire Research TankVision Pro, Model WLA360-A00, cell/tank level indicator kit will be installed on the pump operator's panel. The kit will include an electronic indicator module, a pressure sensor, a 10' sensor cable and a tank vent. The indicator will show the volume of Class "A" foam concentrate in the cell/tank on nine (9) easy to see super bright RGB LEDs. A wide view lens over the LEDs will provide for a viewing angle of 180 degrees. The indicator case will be waterproof, manufactured of Polycarbonate/Nylon material and have a distinctive green label.

The program features will be accessed from the front of the indicator module. The program will support self-diagnostics capabilities, self-calibration, six (6) programmable colored light patterns to display cell/tank volume, adjustable brightness control levels and a data link to connect remote indicators. Low foam level warnings will include flashing LEDs at 1/4 cell/tank and down chasing LEDs when the cell/tank is almost empty.

The indicator will receive an input signal from an electronic pressure sensor. The sensor will be mounted from the outside of the foam cell/tank near the bottom. No probe will be placed on the interior of the cell/tank. Wiring will be weather resistant and have automotive type plug-in connectors.

LIGHT SHIELD

There will be a polished, 16 gauge stainless steel light shield installed over the pump operators panel. The light shield will be split into two separate pieces to provide illumination of the entire pump operators panel.

- There will be 12 volt DC white LED lights installed under the stainless steel light shield to illuminate the controls, switches, essential instructions, gauges, and instruments necessary for the operation of the apparatus. These lights will be activated by the pump panel light switch. Additional lights will be included every 18.00" depending on the size of the pump house.
- One (1) pump panel light will come on when the pump is in ok to pump mode.

The switch panel will be lit when the parking brake is set. This is to afford the operator illumination when first approaching the control panel.

ADDITIONAL LIGHT SHIELD

An additional polished, 16 gauge stainless steel light shield will be provided above passenger's side pump panel.

- There will be 12 volt DC white LED lights installed under the light shield to illuminate the controls, switches, essential instructions, gauges, and instruments necessary for the operation of the apparatus. These lights will be activated by the pump panel light switch. Additional lights will be included every 18.00" depending on the size of the pump house.

AIR HORN SYSTEM

One (1) round, Grover air horn with 6.00" bell will be recessed in the front bumper.

The air horn will be chrome.

The air horn system will be piped to the air brake system wet tank utilizing 0.38" tubing. A pressure protection valve will be installed to prevent the loss of air in the brake system.

Air Horn Location

The air horn will be located on the right side of the bumper, just outside of the frame rail.

Air Horn Control

The air horn(s) will be activated by the following:

- Right side push button switch on the officer side dash, directly rearward of the VDR port

ELECTRONIC SIREN

A Whelen, Model 295HFSA7 electronic siren and remote head with a removable unidirectional microphone will be installed.

The model to be used will be determined by the chassis and location of the siren remote head.

The siren will contain a remote siren head and a siren amplifier with a dual system build in to the amplifier.

The siren features will include:

- Six (6) function siren plus radio repeat and public address
- Will meet California Title 13 and SAE J1849 specifications.
- Model 295HFSA7 will operate two (2) 100 watt speakers
- Operates is dual or mono modes.
- External dip switch selectable modes of operation.
- Outputs 2 independent siren tones creating a "rich harmonic dual tone sound".
- "Hands Free" operation. Turn On/Off and access all three siren tones (wail, yelp, and Piercer) without taking hands from the steering wheel.
- PTT (push to talk) switch on microphone overrides all siren functions.
- Removable unidirectional microphone.
- Adjustable microphone volume.
- Adjustable preset radio repeat volume.
- Input polarity protection.
- Output short circuit protection.
- External mini spade-type fuse.
- Bi-polarity horn/ring control activation.
- Quick disconnect plug for ease of service or replacement.
- Five year HDP "Heavy Duty Professional" warranty on amp.

This siren to be active when the battery switch is on and the emergency master switch is on.

ELECTRIC SIREN, LOCATION,
Siren head will be mounted switch panel LOC #7.

The electronic siren will be controlled on the siren head only. No horn button or foot switches will be provided.

SPEAKER
There will be one (1) Whelen®, Model SA315P, black nylon composite, 100-watt, speaker with through bumper mounting brackets and polished stainless steel grille provided. The speaker will be connected to the siren amplifier.

The speaker will be recessed in the right side of the front bumper, towards the outside.

AUXILIARY MECHANICAL SIREN
There will be a Federal Signal Model Q2B mechanical siren furnished and installed in the front of the apparatus.

The Q2B will be chrome finish.

The siren will have a 2-gauge cable connected to a power solenoid that is connected by a 2-gauge cable ran battery direct to the primary chassis batteries and will be labeled Q2B+ at the battery. The power solenoid will only be enabled when the emergency master switch is on.

The siren will have a 2-gauge ground wire connected to the chassis battery stud. The cable will be labeled Q2B- at the battery.

The mechanical siren will be recessed in the front bumper on the left side. The siren will be properly supported using the bumper framework.

MECHANICAL SIREN CONTROL
The mechanical siren will be activated by the following:

- Left side foot switch.
- Right side chrome push button switch.

A momentary rocker switch will be included in the left side overhead switch panel to activate the siren brake.

There will be a red outline decal around the black rocker switch.

A momentary rocker switch will be included in the right side overhead switch panel to activate the siren brake.

There will be a red outline decal around the black rocker switch.

FRONT ZONE UPPER WARNING LIGHTS

There will be one (1) 92.00" Whelen® Freedom™ IV lightbar mounted on the cab roof.

The lightbar will include the following:

- One (1) red flashing LED module in the left side rear corner position.
- One (1) white flashing LED module in the left side end position.
- One (1) red flashing LED module in the left side front corner position.
- One (1) red flashing LED module in the left side first front position.
- One (1) red flashing LED module in the left side second front position.
- One (1) white flashing LED module in the left side third front position.
- One (1) red flashing LED module in the left side fourth front position.
- One (1) red flashing LED module in the left side fifth front position.
- One (1) red steady burn LED module in the left side sixth front position.
- One (1) red flashing LED module in the left side seventh front position.
- One (1) 795 LED traffic light controller set to national standard high priority in the center front positions.
- One (1) red flashing LED module in the right side seventh front position.
- One (1) red steady burn LED module in the right side sixth front position.
- One (1) red flashing LED module in the right side fifth front position.
- One (1) red flashing LED module in the right side fourth front position.
- One (1) white flashing LED module in the right side third front position.
- One (1) red flashing LED module in the right side second front position.
- One (1) red flashing LED module in the right side first front position.
- One (1) red flashing LED module in the right side front corner position.
- One (1) white flashing LED module in the right side end position.
- One (1) red flashing LED module in the right side rear corner position.

There will be clear lenses included on the lightbar.

The following switches may be installed in the cab on the switch panel to control the lightbar:

- a switch to control the flashing LED modules.
- the traffic light controller with the emergency master switch only.
- a driver's side momentary cab switch and a passenger's side momentary cab switch with no emergency master control to activate the traffic light controller.

The white flashing LED modules and the traffic light controller will be disabled when the parking brake is applied.

The red flashing LED modules in the front positions may be load managed when the parking brake is applied.

BRACKETS, LIGHTBAR

There will be two (2) fabricated bracket(s) supplied for mounting the roof mounted lightbar 1.00" above the cab roof.

FRONT ZONE LOWER LIGHTS

There will be four (4) Whelen®, LED lights installed on the cab face above the headlights, in a common bezel matching the headlamp bezel per the following:

- One (1) Model M6**, 4.31" high x 6.75" long x 1.38" deep light installed in the outside position on the driver's side. The driver's side front outside warning light to be red.
- One (1) Model 6RB**, 4.18" high x 6.56"" long x 3.43" deep light installed in the inside position on the driver's side. The driver's side front inside warning light to be red.
- One (1) Model 6RB**, 4.18" high x 6.56"" long x 3.43" deep light installed in the inside position on the passenger's side. The passenger's side front inside warning light to be red.
- One (1) Model M6**, 4.31" high x 6.75" long x 1.38" deep light installed in the outside position on the passenger's side. The passenger's side front outside warning light to be red.

The lens colors will be the same color as the LED's.

There will be a switch located in the cab on the switch panel to control both sets of lights.

The inside lights may be load managed if colored or disabled if white when the parking brake is applied.

DAYTIME RUNNING LIGHTS (HEADLIGHTS)

The low-beam headlights used as daytime running lights will be activated with the following measures:

- Ignition switch is turned on
- Parking brake is released

These lights will be deactivated with any one of the following measures:

- Headlight switch is turned on
- High-beam flash is turned on
- Parking brake is set

HEADLIGHT FLASHER

The high beam headlights will flash alternately between the left and right side.

There will be a switch installed in the cab on the switch panel to control the high beam flash. This switch will be live when the battery switch and the emergency master switches are on.

The flashing will automatically cancel when the hi-beam headlight switch is activated or when the parking brake is set.

SIDE ZONE LOWER LIGHTING

There will be four (4) Whelen®, Model M6**, 4.31" high x 6.75" long x 1.37" deep flashing LED warning lights with chrome trim installed per the following:

- Two (2) lights located, one (1) each side on the front custom cab corner. The driver's side, side front light to include red warning LEDs and the passenger's side, side front light to include red warning LEDs.
- Two (2) lights located, one (1) each side above rear wheels. The driver's side, side rear light to include red warning LEDs and the passenger's side, side rear light to include red warning LEDs.
- The warning light lens colors to be the same as the LEDs.

There will be a switch in the cab on the switch panel to control the lights.

INTERIOR CAB DOOR WARNING LIGHTS

There will be four (4) Weldon, Model 8401-0000-20, 16.00" long x 0.75" high x 0.625" deep amber 12 volt DC LED flashing strip lights provided.

- One (1) light on the left side cab door.
- One (1) light on the right side cab door.
- One (1) light on the right side crew cab door.
- One (1) light on the left side crew cab door.

Each light will be located over the door window.

Each light will be activated when the battery switch is on, respective door is opened and no other controls are on.

Each light will be installed so the flash pattern directs traffic away from the doors.

ELECTRICAL CONNECTORS FOR WARNING LIGHTS

The lights will be installed with a weatherproof insulated crimped connectors in order to provide ease of connection/disconnection of the circuit applied to.

SIDE WARNING LIGHTS

There will be two (2) Whelen®, Model M6**, 4.31" high x 6.75" wide x 1.37" deep flashing LED warning light(s) with chrome trim provided, one (1) on the left side cab, one (1) on the right side cab, each behind the crew cab doors, above the exterior compartment doors .

The light(s) to include red flashing LEDs.

The warning light lens colors to be the same as the LEDs.

There will be a switch in the cab on the switch panel to control the lights.

White LEDs will be deactivated when the parking brake is applied.

Amber, blue, green and red LEDs may be load managed when the parking brake is applied.

REAR ZONE LOWER LIGHTING

There will be two (2) Whelen®, Model M6*, LED flashing warning lights will be located at the rear of the apparatus.

- The driver's side rear light to be red
- The passenger's side rear light to be red

Both lights will include a lens that is the same color as the LED's.

There will be a switch located in the cab on the switch panel to control the lights.

REAR/SIDE UPPER ZONE WARNING LIGHTS

There will be four (4) Whelen®, deep flashing LED warning lights with chrome trim provided at the rear of the apparatus per the following:

- One (1) Model M7** light installed on the driver's side, side of the apparatus as high and close to the rear as practical. The side rear upper light(s) on the driver's side to be red
- One (1) Model M6** light installed on the driver's side, rear of the apparatus as high and close to the outside as practical. The rear upper light(s) on the driver's side to be red.
- One (1) Model M6** light installed on the passenger's side, rear of the apparatus as high and close to the outside as practical. The rear upper light(s) on the passenger's side to be red
- One (1) Model M7** light installed on the passenger's side, side of the apparatus as high and close to the rear as practical. The side rear upper light(s) on the passenger's side to be red.
- The color of the lenses will be the same color as the LED's.

There will be a switch in the cab on the switch panel to control the lights.

The rear warning lights will be mounted on brackets with all wiring totally enclosed. At the right side, the warning light will be installed on a stainless steel enclosure, which covers the hydraulic ladder rack lock. At the left side, the warning light will be installed on a stainless steel bracket that is at the same height as the right side ladder lock enclosure.

TRAFFIC DIRECTING LIGHT

There will be one (1) Whelen® Model TAZ86, 1.75" high x 30.87" long x 2.18" deep, traffic directing light with eight (8) amber LED modules installed at the rear of the apparatus.

The Whelen Model TACTL5 control head will be included with this installation. The control head will be energized when the battery switch is on.

The remote flash control to be energized when the emergency master switch is on.

This traffic directing light will be mounted in a cross tube over the hose bed, between the body side sheets, at the rear of the apparatus.

The traffic directing light will be installed in a treadplate box, mounted to the rear face of the cross tube.

The traffic directing light controller will be located within the switch panel on the center console. The controller will be within easy reach of the driver.

120 VOLT RECEPTACLE

There will be two (2), 15/20 amp 120 volt AC three (3) wire straight blade duplex receptacle(s) with an interior stainless steel wall plate, installed LS2 – right side wall, next to the ceiling and approximately 3" in from the door opening RS2 – left side wall, next to the ceiling and approximately 3" in from the door opening. The NEMA configuration for the receptacle(s) will be 5-20R.

The receptacle(s) will be powered from the on board 12 volt DC to 120 volt AC power inverter.

There will be a label installed near the receptacle(s) that state the following:

- Line Voltage
- Current Ratting (amps)
- Phase
- Frequency

MOUNTING BRACKET

A South Park, model QL48Z25C, 2.50" mounting bracket will be provided and mounted on the rear body wall, right of the B1 compartment, centered.

LOOSE EQUIPMENT

The following equipment will be furnished with the completed unit:

- One (1) bag of chrome, stainless steel, or cadmium plated screws, nuts, bolts and washers, as used in the construction of the unit.

NFPA LOOSE EQUIPMENT

NFPA Required Loose Equipment Provided by Fire Department

The following loose equipment as outlined in NFPA 1900, 2024 edition, table 8.1 and CAN/ULC 515:2024 edition, section 5.2 will be provided by the fire department:

- One (1) traffic vest for each seating position, each vest to comply with ANSI/ISEA 207, *Standard for High Visibility Public Safety Vests*, and have a five-point breakaway feature that includes two (2) at the shoulders, two (2) at the sides, and one (1) at the front.
- Five (5) fluorescent orange traffic cones not less than 28.00" (711 mm) in height, each equipped with a 6.00" (152 mm) retro-reflective white band no more than 4.00" (152 mm) from the top of the cone, and an additional 4.00" (102 mm) retro-reflective white band 2.00" (51 mm) below the 6.00" (152 mm) band.
- Five (5) illuminated warning devices such as highway flares, unless the five (5) fluorescent orange traffic cones have illuminating capabilities.

NFPA Loose Equipment That Should be Considered

The following loose equipment as outlined in NFPA 1900, 2024 edition, appendix table A.8.4 (a) and CAN/ULC 515:2024 edition, section 5.2 should be considered:

- 800 ft (60 m) of 2.50" (65 mm) or larger fire hose.
- 400 ft (120 m) of 1.50" (38 mm), 1.75" (45 mm), or 2.00" (52 mm) fire hose.
- One (1) handline nozzle, 200 gpm (750 L/min) minimum.
- Two (2) handline nozzles, 95 gpm (360 L/min) minimum.
- One (1) smooth bore or combination nozzle with shutoff and with 2.50" (65 mm) inlet that flows a minimum of 250 gpm (950 L/min).
- Four (4) SCBA apparatus
- Four (4) SCBA spare cylinders
- One (1) first aid kit.
- Four (4) combination spanner wrenches.
- Two (2) hydrant wrenches.
- One (1) double female 2.50" (65 mm) adapter with national hose (NH) threads.
- One (1) double male 2.50" (65 mm) adapter with national hose (NH) threads.
- One (1) rubber mallet, for use on suction hose connections.
- Two (2) salvage covers each a minimum size of 12 ft × 18 ft (3.7 m × 5.5 m).
- One (1) automatic external defibrillator (AED).

SOFT SUCTION HOSE

There will be no soft suction hose provided.

STRAINER PROVIDED BY DEALER

NFPA 1900, 2024 edition, section 8.3 and CAN/ULC S515:2024 edition, section 5.2 requires a suction strainer when suction hose is provided.

The strainer is not on the apparatus as manufactured. The dealer will provide the suction strainer.

PAINT PROCESS

The exterior custom cab and body painting procedure will consist of a seven (7) step finishing process as follows:

1. Manual Surface Preparation - All exposed metal surfaces on the custom cab and body will be thoroughly cleaned and prepared for painting. Imperfections on the exterior surfaces will be removed and sanded to a smooth finish. Exterior seams will be sealed before painting. Exterior surfaces that will not be painted include; chrome plating, polished stainless steel, anodized aluminum and bright aluminum treadplate.

2. Chemical Cleaning and Pretreatment - All surfaces will be chemically cleaned to remove dirt, oil, grease, and metal oxides to ensure the subsequent coatings bond well. The aluminum surfaces will be properly cleaned and treated using a high pressure, high temperature 4 step Acid Etch process. The steel and stainless surfaces will be properly cleaned and treated using a high temperature 3 step process specifically designed for steel or stainless. The chemical treatment converts the metal surface to a passive condition to help prevent corrosion.
3. Surfacer Primer - The Surfacer Primer will be applied to a chemically treated metal surface to provide a strong corrosion protective basecoat. A minimum thickness of 2 mils of Surfacer Primer is applied to surfaces that require a Critical aesthetic finish. The Surfacer Primer is a two-component high solids urethane that has excellent sanding properties and an extra smooth finish when sanded.
4. Finish Sanding - The Surfacer Primer will be sanded with a fine grit abrasive to achieve an ultra-smooth finish. This sanding process is critical to produce the smooth mirror like finish in the topcoat.
5. Sealer Primer - The Sealer Primer is applied prior to the Basecoat in all areas that have not been previously primed with the Surfacer Primer. The Sealer Primer is a two-component high solids urethane that goes on smooth and provides excellent gloss hold out when topcoated.
6. Basecoat Paint - Two coats of a high performance, two component high solids polyurethane basecoat will be applied. The Basecoat will be applied to a thickness that will achieve the proper color match. The Basecoat will be used in conjunction with a urethane clear coat to provide protection from the environment.
7. Clear Coat - Two (2) coats of Clear Coat will be applied over the Basecoat color. The Clear Coat is a two-component high solids urethane that provides superior gloss and durability to the exterior surfaces. Lap style and roll-up doors will be Clear Coated to match the body. Paint warranty for the roll-up doors will be provided by the roll-up door manufacturer.

After the cab and body are painted, the color will be verified to make sure that it matches the color standard. Electronic color measuring equipment will be used to compare the color sample to the color standard entered into the computer. Color specifications will be used to determine the color match. A Delta E reading will be used to determine a good color match within each family color.

All removable items such as brackets, compartment doors, door hinges, and trim will be removed and painted separately if required, to ensure paint behind all mounted items. Body assemblies that cannot be finish painted after assembly will be finish painted before assembly.

The paint finish quality levels for critical areas of the apparatus (cab front and sides, body sides and doors, and boom lettering panels) are to meet or exceed Cadillac/General Motors GMW15777 global paint requirements. Orange peel levels are to meet or exceed the #6 A.C.T. standard in critical areas. The manufacture's written paint standards will be available upon request.

Environmental Impact

Contractor will meet or exceed all current state regulations concerning paint operations. Pollution control will include measures to protect the atmosphere, water and soil. Controls will include the following conditions:

- Topcoats and primers will be chrome and lead free.
- Metal treatment chemicals will be chrome free. The wastewater generated in the metal treatment process will be treated on-site to remove any other heavy metals.
- Particulate emission collection from sanding operations will have a 99.99 percent efficiency factor.
- Particulate emissions from painting operations will be collected by a dry filter or water wash process. If the dry filter is used, it will have an efficiency rating of 98 percent. Water wash systems will be 99.97 percent efficient.
- Water from water wash booths will be reused. Solids will be removed on a continual basis to keep the water clean.
- Paint wastes are disposed of in an environmentally safe manner.
- Empty metal paint containers will be recycled to recover the metal.
- Solvents used in clean-up operations will be recycled on-site or sent off-site for distillation and returned for reuse.

Additionally, the finished apparatus will not be manufactured with or contain products that have ozone depleting substances. Contractor will, upon demand, present evidence that the manufacturing facility meets the above conditions and that it is in compliance with his state EPA rules and regulations.

CAB PAINT
The cab will be painted #90 red.

BODY PAINT
The body will be painted to match the single cab paint color.

PAINT CHASSIS FRAME ASSEMBLY
The chassis frame assembly will be finished with primer and gloss black paint before the installation of the cab and body, and before installation of the engine and transmission assembly, air brake lines, electrical wire harnesses, etc.

Components that are included with the chassis frame assembly that will be painted (unless otherwise stated in a secondary option) are:

- Frame rails
- Frame liners
- Cross members
- Axles
- Suspensions
- Steering gear
- Battery boxes
- Bumper extension weldment
- Frame extensions
- Body mounting angles
- Rear Body support substructure (front and rear)

- Pump house substructure
- Steel fuel tank
- Castings
- Individual piece parts used in chassis and body assembly

Components treated with epoxy E-coat protection prior to paint:

- Two (2) C-channel frame rails
- Two (2) frame liners

The E-coat process will meet the technical properties shown.

AXLE HUB PAINT
All axle hubs will be painted to match lower job color.

COMPARTMENT INTERIOR FINISH
The interior of the compartments will be dual action finished and not painted.

REFLECTIVE BAND
An 8.00" black reflective band will be provided across the front of the vehicle and along the sides of the cab and body.

REFLECTIVE ACROSS CAB FACE
The reflective band provided on the cab face will be above, below or at the headlight level.

CHEVRON STRIPING, REAR
There will be chevron striping located on the rear-facing vertical surface of the apparatus.

The color will be red and Solid Yellow 983-71 diamond grade.

NFPA 1901 15.9.3.2 requires that 50% of the rear surface will be covered with chevron striping. This fire apparatus does not meet the minimum coverage specified and is not compliant to NFPA 1901 standards in this regard.

NFPA 1901 15.9.3.2.1 requires each stripe in the chevron to be a single color alternating between red and either yellow, fluorescent yellow, or fluorescent yellow green. Use of the red and yellow color is endorsed by the International Association of Fire Chiefs. The fire apparatus purchaser will realize that by requesting an exception to this aspect of NFPA 1901, this fire apparatus will not contribute to the national standardization initiative. Per the purchaser's specification, this apparatus will not be compliant to NFPA 1901 standards in this regard.

GOLD LEAF STRIPE
There will be a genuine gold leaf stripe applied above and below the reflective band. The gold leaf stripes will be .50" wide with an outline.

REFLECTIVE STRIPE OUTLINE
A black vinyl outline will be provided for each chevron stripe at the rear of the truck.

There will be no warranty provided for this material.

CAB DOOR REFLECTIVE STRIPE
A 6.00" x 16.00" ruby red reflective stripe will be provided across the interior of each cab door. The stripe will be located approximately 1.00" up from the bottom, on the door panel.

This stripe will meet the current edition of applicable NFPA standards.

CAB STRIPE
There will be a genuine gold leaf stripe provided on both sides of the cab in place of the chrome molding.

LETTERING
The lettering will be totally encapsulated between two (2) layers of clear vinyl.

BODY STRIPE
There will be a genuine gold leaf stripe around the top, bottom, front and rear edges of the body compartments with scrolls in each corner.

LETTERING
Forty-one (41) to sixty (60) genuine gold leaf lettering, 3.00" high, with outline and shade will be provided.

LETTERING
One (1) to twenty (20) genuine gold leaf lettering, 2.00" high, with outline and shade will be provided.

LETTERING
There will be reflective lettering, 8.00" high, with outline and shade provided. There will be six (6) letters provided.

LETTERING
There will be reflective lettering, 5.00" high, with outline and shade provided. There will be five (5) letters provided.

LETTERING
There will be non-reflective vinyl lettering, 18.00" high, with no outline or shade provided. There will be five (5) letters provided.

LETTERING
There will be reflective lettering, 12.00" high, with outline and shade provided. There will be 23 letters provided.

EMBLEM - STRAIGHT LETTERING
There will be one (1) pair of 4" tall "ISO CLASS 1" gold leaf emblem(s) installed.

MALTESE CROSS INSTALLATION
There will be one (1) pair of maltese crosses, comprised of genuine gold leaf material, provided and installed on the front cab doors, one (1) each side.

FIRE APPARATUS PARTS MANUAL
There will be one (1) custom parts manual(s) in USB flash drive format for the complete fire apparatus provided.

The manual(s) will contain the following:

- Job number
- Part numbers with full descriptions
- Table of contents
- Parts section sorted in functional groups reflecting a major system, component, or assembly
- Parts section sorted in alphabetical order
- Instructions on how to locate parts

Each manual will be specifically written for the chassis and body model being purchased. It will not be a generic manual for a multitude of different chassis and bodies.

Service Parts Internet Site
The service parts information included in these manuals are also available on the Pierce website. The website offers additional functions and features not contained in this manual, such as digital photographs and line drawings of select items. The website also features electronic search tools to assist in locating parts quickly.

CHASSIS SERVICE MANUALS
There will be one (1) chassis service manuals on USB flash drives containing parts and service information on major components provided with the completed unit.

The manual will contain the following sections:

- Job number
- Table of contents
- Troubleshooting
- Front Axle/Suspension
- Brakes
- Engine
- Tires
- Wheels
- Cab
- Electrical, DC
- Air Systems
- Plumbing

- Appendix

The manual will be specifically written for the chassis model being purchased. It will not be a generic manual for a multitude of different chassis and bodies.

CHASSIS OPERATION MANUAL
The chassis operation manual will be provided on one (1) USB flash drive. The manual will be in the English language.

ELECTRICAL WIRING DIAGRAMS
Two (2) electrical wiring diagrams, prepared for the model of chassis and body, will be provided.

ONE (1) YEAR MATERIAL AND WORKMANSHIP
A Pierce basic apparatus limited warranty certificate, WA0008, is included with this proposal.

ENGINE WARRANTY
A Cummins **five (5) year** limited engine warranty will be provided. A limited warranty certificate, WA0181, is included with this proposal.

STEERING GEAR WARRANTY
A Sheppard **three (3) year** limited steering gear warranty will be provided. A copy of the warranty certificate will be submitted with this proposal.

FIFTY (50) YEAR STRUCTURAL INTEGRITY
The Pierce custom chassis frame only (does not include crossmembers) limited warranty certificate, WA0013, is included with this proposal.

FRONT AXLE THREE (3) YEAR MATERIAL AND WORKMANSHIP WARRANTY
The Pierce TAK-4 suspension limited warranty certificate, WA0050, is included with this proposal.

SINGLE REAR AXLE FIVE (5) YEAR MATERIAL AND WORKMANSHIP WARRANTY
A Meritor™ Axle 5 year limited warranty will be provided.

ABS BRAKE SYSTEM THREE (3) YEAR MATERIAL AND WORKMANSHIP WARRANTY
A Meritor Wabco™ ABS brake system limited warranty certificate, WA0232, is included with this proposal.

TEN (10) YEAR STRUCTURAL INTEGRITY
The Pierce custom cab limited warranty certificate, WA0012, is included with this proposal.

TEN (10) YEAR PRO-RATED PAINT AND CORROSION
A Pierce cab limited pro-rated paint warranty certificate, WA0055, is included with this proposal.

FIVE (5) YEAR MATERIAL AND WORKMANSHIP
The Pierce Command Zone electronics limited warranty certificate, WA0014, is included with this proposal.

CAMERA SYSTEM WARRANTY
A Pierce fifty four (54) month warranty will be provided for the camera system**.**

COMPARTMENT LIGHT WARRANTY
The Pierce 12 volt DC LED strip lights limited warranty certificate, WA0203, is included with this proposal.

TRANSMISSION WARRANTY
The transmission will have a **five (5) year/unlimited mileage** warranty covering 100 percent parts and labor. The warranty will be provided by Allison Transmission.

Note: The transmission cooler is not covered under any extended warranty you may be getting on your Allison Transmission. Please review your Allison Transmission warranty for coverage limitations.

TRANSMISSION COOLER WARRANTY
The transmission cooler will carry a five (5) year parts and labor warranty (exclusive to the transmission cooler). In addition, a collateral damage warranty will also be in effect for the first three (3) years of the warranty coverage and will not exceed $10,000 per occurrence. A copy of the warranty certificate will be included with this proposal.

WATER TANK WARRANTY
A UPF poly water tank limited warranty certificate, WA0195, is included with this proposal.

TEN (10) YEAR STRUCTURAL INTEGRITY
The Pierce apparatus body limited warranty certificate, WA0009, is included with this proposal.

PUMP WARRANTY
A Hale pump limited warranty certificate, WA0388, is included with this proposal.

TEN (10) YEAR PUMP PLUMBING WARRANTY
The Pierce apparatus plumbing limited warranty certificate, WA0035, is included with this proposal.

FOAM SYSTEM WARRANTY
The Husky 3 foam system limited warranty certificate, WA0231, is included with this proposal.

TEN (10) YEAR PRO-RATED PAINT AND CORROSION
A Pierce body limited pro-rated paint warranty certificate, WA0057, is included with this proposal.

THREE (3) YEAR MATERIAL AND WORKMANSHIP
The Pierce Goldstar gold leaf lamination limited warranty limited warranty certificate, WA0018, is included with this proposal.

VEHICLE STABILITY CERTIFICATION
The fire apparatus manufacturer will provide a certification stating the apparatus complies with NFPA 1900, current edition, section 7.14, Vehicle Stability. The certification is included with this proposal.

ENGINE INSTALLATION CERTIFICATION

The fire apparatus manufacturer will provide a certification, along with a letter from the engine manufacturer stating they approve of the engine installation in the bidder's chassis. The certification will be provided at the time of delivery.

POWER STEERING CERTIFICATION

The fire apparatus manufacturer will provide a certification stating the power steering system as installed meets the requirements of the component supplier. The certification is included with this proposal.

CAB INTEGRITY CERTIFICATION

The fire apparatus manufacturer will provide a cab crash test certification with this proposal. The certification will state that a specimen representing the substantial structural configuration of the cab has been tested and certified by an independent third party test facility. Testing events will be documented with photographs, real-time and high-speed video, vehicle accelerometers, cart accelerometers, and a laser speed trap. The fire apparatus manufacturer will provide a state licensed professional engineer to witness and certify all testing events. Testing will meet or exceed the requirements below:

- SAE J2422 Cab Roof Strength Evaluation - Quasi-Static Loading Heavy Trucks.
- European Occupant Protection Standard ECE Regulation No.29.
- SAE J2420 COE Frontal Strength Evaluation - Dynamic Loading Heavy Trucks.

Side Impact

The cab will be subjected to dynamic preload where a 14,320-lb moving barrier is slammed into the side of the cab at 5.50 mph, striking with an impact of 13,000 ft-lb of force. This test is part of the SAE J2422 test procedure and more closely represents the forces a cab will see in a rollover incident.

Frontal Impact

The same cab will withstand a frontal impact of 32,600 ft-lb of force using a moving barrier in accordance with SAE J2420.

Additional Frontal Impact

The same cab will withstand a frontal impact of 65,098 ft-lb of force using a moving barrier. (Twice the force required by SAE J2420)

Roof Crush

The cab will be subjected to a roof crush force of 22,500 lb. This value meets the ECE 29 criteria, and is equivalent to the front axle rating up to a maximum of ten (10) metric tons.

Additional Roof Crush

The same cab will be subjected to a roof crush force of 110,000 lbs. (Four and a half times the load criteria of ECE 29)

The same cab will withstand all tests without any measurable intrusion into the survival space of the occupant area.

CAB DOOR DURABILITY CERTIFICATION

Robust cab doors help protect occupants. Cab doors will survive a 200,000 cycle door slam test where the slamming force exceeds 20 G's of deceleration. The bidder will certify that the sample doors similar to those provided on the apparatus have been tested and have met these criteria without structural damage, latch malfunction, or significant component wear.

WINDSHIELD WIPER DURABILITY CERTIFICATION

Visibility during inclement weather is essential to safe apparatus performance. Windshield wipers will survive a 3 million cycle durability test in accordance with section 6.2 of SAE J198 *Windshield Wiper Systems - Trucks, Buses and Multipurpose Vehicles.* The bidder will certify that the wiper system design has been tested and that the wiper system has met these criteria.

ELECTRIC WINDOW DURABILITY CERTIFICATION

Cab window roll-up systems can cause maintenance problems if not designed for long service life. The window regulator design will complete 30,000 complete up-down cycles and still function normally when finished. The bidder will certify that sample doors and windows similar to those provided on the apparatus have been tested and have met these criteria without malfunction or significant component wear.

SEAT BELT ANCHOR STRENGTH

Seat belt attachment strength is regulated by Federal Motor Vehicle Safety Standards and should be validated through testing. Each seat belt anchor design will withstand 3000 lb of pull on both the lap and shoulder belt in accordance with FMVSS 571.210 Seat Belt Assembly Anchorages. The bidder will certify that each anchor design was pull tested to the required force and met the appropriate criteria.

SEAT MOUNTING STRENGTH

Seat attachment strength is regulated by Federal Motor Vehicle Safety Standards and should be validated through testing. Each seat mounting design will be tested to withstand 20 G's of force in accordance with FMVSS 571.207 Seating Systems. The bidder will certify, at time of delivery, that each seat mount and cab structure design was pull tested to the required force and met the appropriate criteria.

PERFORMANCE CERTIFICATIONS

Cab Air Conditioning

Good cab air conditioning temperature and air flow performance keeps occupants comfortable, reduces humidity, and provides a climate for recuperation while at the scene. The cab air conditioning system will cool the cab from a heat-soaked condition at 100 degrees Fahrenheit to an average of 78 degrees Fahrenheit in 30 minutes. The bidder will certify that a substantially similar cab has been tested and has met these criteria.

Cab Defroster

Visibility during inclement weather is essential to safe apparatus performance. The defroster system will clear the required windshield zones in accordance with SAE J381 Windshield Defrosting Systems Test Procedure And Performance Requirements - Trucks, Buses, And Multipurpose Vehicles. The bidder will certify that the defrost system design has been tested in a cold chamber and passes the SAE J381 criteria.

Cab Auxiliary Heater

Good cab heat performance and regulation provides a more effective working environment for personnel, whether in-transit, or at a scene. An auxiliary cab heater will warm the cab 77 degrees Fahrenheit from a cold-soak, within 30 minutes when tested using the coolant supply methods found in SAE J381. The bidder will certify, at time of delivery, that a substantially similar cab has been tested and has met these criteria.

AMP DRAW REPORT

The bidder will provide, at the time of bid and delivery, an itemized print out of the expected amp draw of the entire vehicle's electrical system.

The manufacturer of the apparatus will provide the following:

- Documentation of the electrical system performance tests.
- A written load analysis, which will include the following:
    - The nameplate rating of the alternator.
    - The alternator rating under the conditions specified per:
        - Current edition of applicable NFPA standards.
    - The minimum continuous load of each component that is specified per:
        - Current edition of applicable NFPA standards.
    - Additional loads that, when added to the minimum continuous load, determine the total connected load.
    - Each individual intermittent load.

All of the above listed items will be provided by the bidder per the current edition of applicable NFPA standards.

END OF SPECIFICATIONS

Turning Performance Analysis

12/08/2025

Bid Number: 1103
Department: Santa Rosa Fire Department
Chassis: Enforcer Chassis
Body: Pumper, Short, Aluminum, 2nd Gen

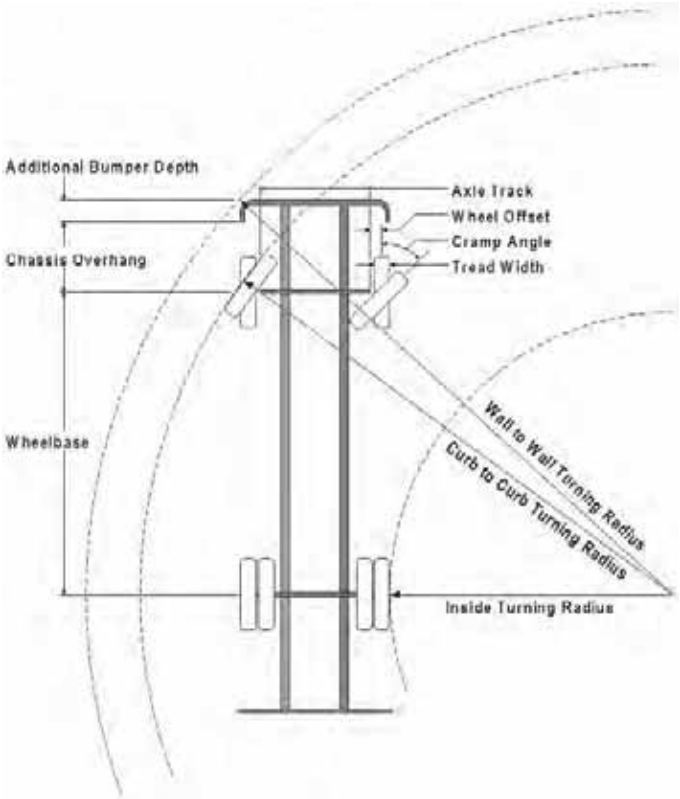

Parameters:

*Inside Cramp Angle:	45°
Axle Track:	82.92 in.
Wheel Offset:	3.12 in.
Tread Width:	12.4 in.
Chassis Overhang:	65.95 in.
Additional Bumper Depth:	7 in.
Front Overhang:	72.95 in.
Wheelbase:	177.5 in.

Calculated Turning Radii:

Inside Turn:	14 ft. 0 in.
Curb to curb:	27 ft. 0 in.
Wall to wall:	30 ft. 8 in.

Category	Option	Description
Bumpers	0603633	Bumper, Non-Extended, Steel, Painted, Saber FR/Enforcer
Axle, Front, Custom	0630705	Axle, Front, Oshkosh TAK-4, Non Drive, 19,500 lb, Enforcer
Wheels, Front	0019575	Wheels, Front, Alcoa, 22.50" x 9.00", Aluminum, Hub Pilot
Tires, Front	0582936	Tires, Front, Goodyear, G289 WHA, 315/80R22.50, 20 ply

Notes:

*Actual Inside cramp angle may be less than shown.

Curb to Curb turning radius calculated for 9.00 inch curb.

Definitions:	
Inside CrampAngle	Maximum turning angle of the front inside fire.
Axle Track	King-pin to King-pin distance of front axle.
Wheel Offset	Offset from the center line of the wheel to the King-pin.
Tread Width	Width of the tire tread.
Chassis Overhang	Distance of the center line of the front axle to the front edge of the cab. This does not include the bumper depth.
Additional Bumper Wheel	Depth that the bumper assembly adds to the front overhang.
Wheelbase	Distance between the center lines of the vehicles front and rear axles.
Inside Turning Radius	Radius of the smallest circle around which the vehicle can turn.
Curb to Curb Turning Radius	Radius of the smallest circle around which the vehicle's tires can turn. This measures assumes a curb height of 9 inches.
Wall to Wall Turning Radius	Radius of the smallest circle around which the vehicle's tires can turn. This measures takes into account any front overhang due to chassis , bumper extensions and or aerial devices.

Pumper/Tanker - Customer Summary

Weight Distribution Worksheet 5.0

© 2023 by Pierce Manufacturing Inc., All Rights Reserved

CUSTOMER NAME	Santa Rosa Fire Department
BID / JOB #	Bid 1103 REV A
VEHICLE TYPE	Enforcer 129" 2G Pumper AL
BY:	Alex Rice (ARI)
DATE:	8/26/2025
Manufacturer	Pierce Enforcer FR
Chassis	Enforcer FR 4x2, 4x4, 70" Cab
Engine/Transmission	X15 '24 / 4000 series
Body Type	Pumper, 129" Short
Body Brand	Pierce
Body Side Structure	High / High
Body Construction	Aluminum
Body Doors	Lap
Front Axle Rating	19,500 lb. TAK-4
Rear Axle Rating	24,000 lb.

SUMMARY

	Wheelbase (in)=	177.5
Estimated Weights (lbs)	*FRONT*	*REAR*
LOADED	18238	22289
EMPTY	16512	13679
	TOTAL GVW=	40527

WHEELBASE CALCULATION	
Front Axle to Back of Cab	70
Cab - Pump Gap	2
Wallkthrough or Cab Module	0
Engineer Compartment	0
Speedlays	0
Pump House	45
Pump - Body Gap	1.5
Body to Rear Axle Length	59
Wheelbase =	**177.5**

ESTIMATED AXLE LOADS	Front	Rear
Estimated	18238	22289
Rated	19500	24000
Ratio	45.0%	55.0%
Total GVW =		40527
ESTIMATED EMPTY WEIGHT		
	16512	13679

Estimated Axle Loads are loaded in-service weights, including crew, hose, NFPA equipment allowance, water, foam, fuel and optional equiptment such as generators.

Estimated Empty Weight represents an empty truck without crew, hose, NFPA equiptment allowance, ladders, foam or water, but includes fuel and optional equiptment such as generators.

NFPA WEIGHT
2000 lbs

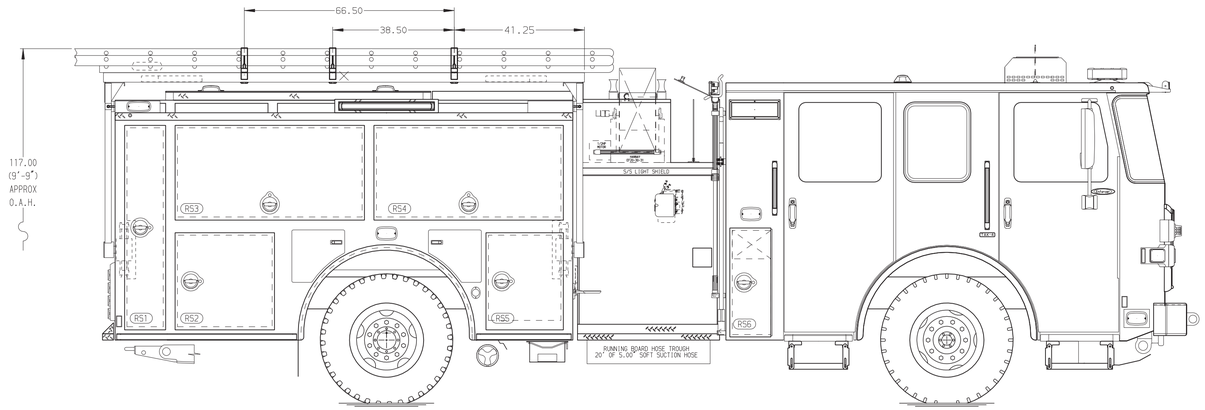

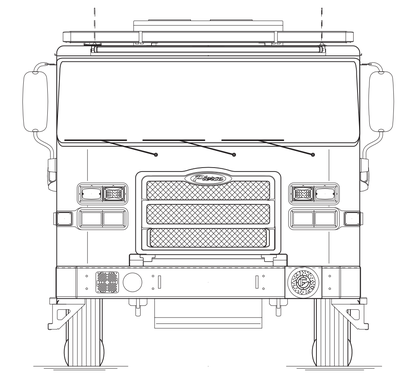

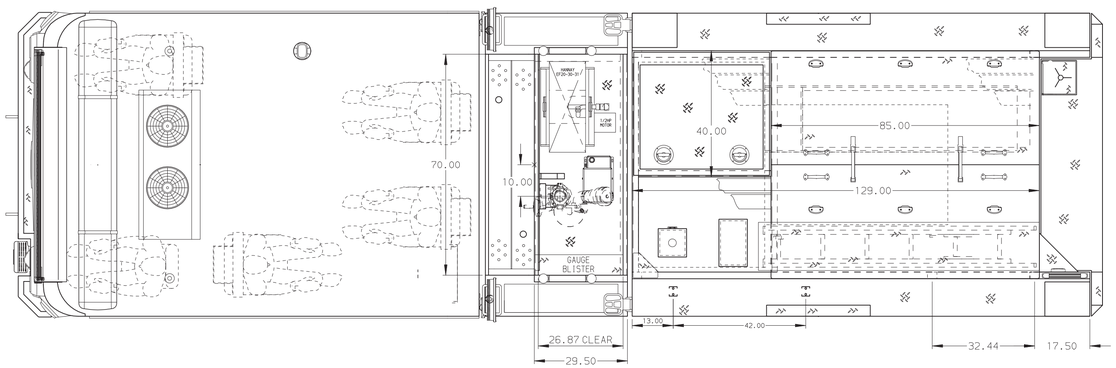

HOSEBED CAPACITIES

1 - 200' OF 1.75" DJP HOSE
2 - 800' OF 2.50" DJP HOSE
3 - 200' OF 2.50" DJP HOSE
4 - 1000' OF 4.00" DJP HOSE
5 - 200' OF 1.75" DJP HOSE

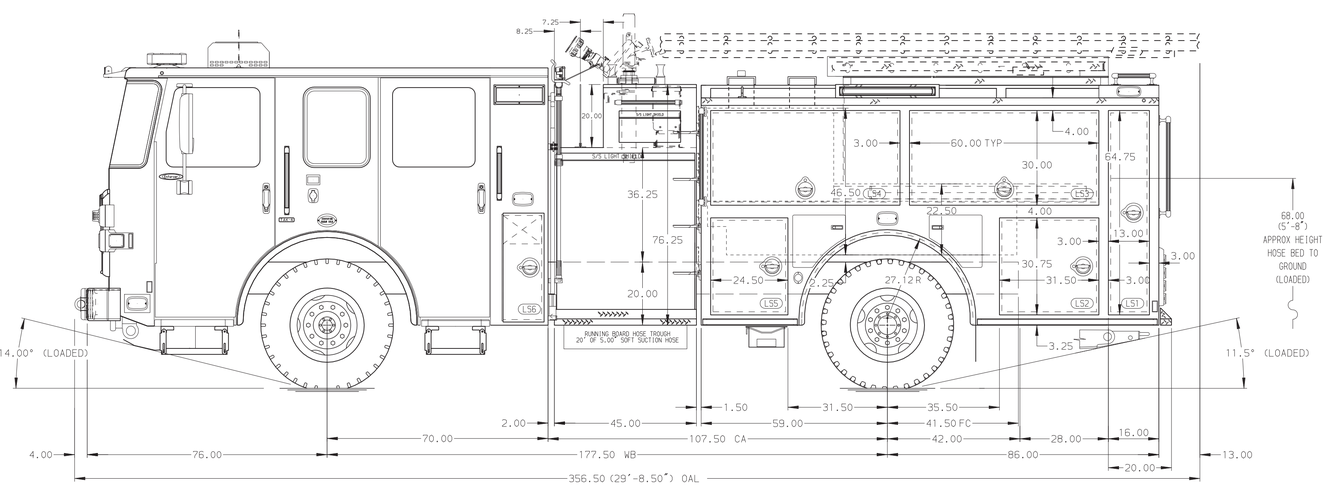

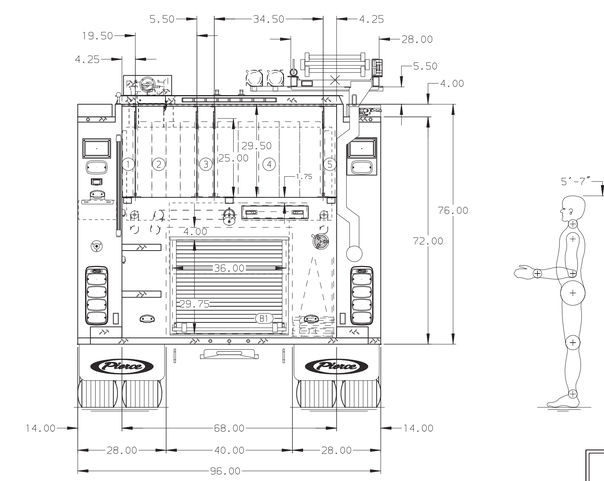

NFPA 1900 (2024) COMPLIANT

ALUMINUM BODY

TARGET O.A.H.= 117.00"

CUSTOMER APPROVAL

APPROVED BY: _____

DATE: _____

Pierce MANUFACTURING INC.

REV	DATE	BY	CH
2	14NOV25	ARI	NPA
1	21AUG25	ARI	NPA

CHASSIS DATA — MAKE: PIERCE — MODEL: ENFORCER

TITLE: 1500 GPM, 530G TANK, 500G WATER, 30G FOAM CELL 129" 2G PUMPER BODY, MUX

FOR: SANTA ROSA FIRE DEPARTMENT — BID# 1103

GOLDEN STATE FIRE APPARATUS, INC. — JON BAUER

DWG NO.: 72956

JOB NO.	PRELIM
SCALE	1:24
DATE	
DRAWN BY	LST
	12AUG25
CHECKED BY	ARI
	12AUG25
SHEET SIZE	D
SHEET NO.	1 OF 1

NOTE

DIMENSIONS SHOWN ARE APPROXIMATE AND ARE SUBJECT TO MINOR DEVIATIONS AS MAY OCCUR OR BE NECESSARY IN CONSTRUCTION.
MINOR DETAILS NOT SHOWN.

Certification Document CD0196
Statement of Compliance to NFPA 1900-2024
Vehicle Stability

NFPA 1900 Section 7.14 states "all apparatus shall be equipped with a stability control system in any configuration for which its commercially available."

For apparatus that cannot be equipped with a stability control system, Pierce fire apparatus comply with NFPA 1900 Section 7.14.3.1 through usage of the tilt table method. As prescribed by the standard, the apparatus is compared to a substantially similar apparatus that has been loaded as required and tested on a tilt table per the SAE J2180 test procedure. A listing of all tested apparatus is maintained by the Research and Development lab and is available for inspection at the Appleton factory.

VALIDATION TEST: Multiple Tests

Pierce Manufacturing, Inc.

David W. Archer
Vice President of Engineering
November 1, 2023

7.14.1* Stability Control System	
7.14.1.1	The apparatus shall be equipped with a stability control system in any configuration for which it is commercially available.
7.14.1.2	The stability control system shall have, at a minimum, a steering wheel position sensor, a vehicle yaw sensor, a lateral accelerometer, and
7.14.2	Apparatus completed in two or more stages shall not exceed the incomplete vehicle manufacturer's maximum allowable vertical center of
7.14.3 Rollover Stability.	
7.14.3.1	Structural fire apparatus not equipped with a stability control system and all wildland fire apparatus shall meet either of the following: (1)*The apparatus shall remain stable in both directions in accordance with Table 7.14.3.1 when tested on a tilt table in accordance with SAE J2180, A Tilt Table Procedure for Measuring the Static Rollover Threshold for Heavy Trucks. (2)The calculated or measured vertical center of gravity (VCG) divided by the rear axle track width shall not exceed the applicable criterion in Table 7.14.3.1.
7.14.3.2	Certification shall be by one of the following methods: (1)Performing a tilt-table test on the completed apparatus (2)Calculating the point at which the apparatus will tip based on centers of gravity, suspension geometry, suspension compliance, and tire compliance (3)Comparing the apparatus design to a previously certified substantially similar apparatus (4)Demonstrating that the calculated or measured center of gravity (CG) divided by the rear axle track width does not exceed the value in Table 7.14.3.1
7.14.3.3	Certification shall be delivered with the fire apparatus.
7.14.3.4	A previously certified apparatus shall be considered substantially similar if it includes a chassis with the same or higher CG height, the same or narrower rear axle track width, the same or greater water tank size and CG height, the same type of front and rear suspension, and the same type and size of aerial device.
7.14.3.5	For purposes of certification the apparatus shall be loaded with fuel, water, firefighting agents, hose, ladders, a weight of 250 lb in each seating position, and weight equivalent to the miscellaneous equipment allowance.
7.14.3.6	If the apparatus is designed to meet a specified higher equipment loading or larger hose bed capacity or to carry additional ground ladders, these greater loads shall be accounted for in the testing, calculating, or measuring.
7.14.3.7	The weight added to the fire apparatus for certification, calculation, or measurement shall be distributed to approximate typical in-service use of the fire apparatus while not exceeding the manufacturer's published

Table 7.14.3.1 Rollover Stability Requirements

Vehicle	Tilt Criteria (degrees)	VCG/Track (percentage)
Wildland fire apparatus ≤33,000 lb (15,000 kg) GVWR	30	75
Wildland fire apparatus >33,000 lb (15,000 kg) GVWR	27	80
Structural fire apparatus not equipped with a stability control system	26.5	80

Certification Document CD0098
Power Steering System

Pierce Manufacturing, Inc. certifies that the power steering system as installed in our custom chassis meets the requirements of the component supplier, the NFPA 1901 and NFPA 1906 guidelines as applicable, and Pierce internal design standards.

VALIDATION TEST: RD1987, RD2055
RD2056, RD2057, RD2058, RD2059

Pierce Manufacturing, Inc.

David W. Archer
Director of Engineering
June 03, 2011

PIERCE MANUFACTURING INC.®

AN OSHKOSH TRUCK CORPORATION® COMPANY

Certification Document CD0189
Saber® FR - Enforcer™
Cab Integrity Certification

Pierce Manufacturing certifies the integrity of the Saber® FR – Enforcer™ cab relative to occupant protection.

A specimen representing the substantial structural configuration of the Saber® FR – Enforcer™ cab models has been successfully tested in accordance with the following standards.

- SAE J2422 Cab Roof Strength Evaluation – Quasi-Static Loading Heavy Trucks.
- European Occupant Protection Standard ECE Regulation No. 29.
- SAE J2420 COE Frontal Strength Evaluation – Dynamic Loading Heavy Trucks.

Side Impact: The test cab was subjected to dynamic preload where a 14,320 lb. moving barrier was impacted into the top corner with sufficient speed to impact the top corner of the cab with 13,000 ft-lbs. of energy. This satisfies SAE J2422 requirements.

Frontal Impact: The test cab was struck by the 14,320 lb. moving barrier at a speed sufficient to impart the required 65,098 ft-lbs. of energy. Twice the energy required per SAE J2420.

Roof Crush: This test cab was then subjected to a roof crush force of 110,000 lbs. This value exceeds the ECE 29 criteria, which must be equivalent to the front axle rating. This is 4.6 times higher than max. front axle rating.

Pass-Fail criteria of the SAE tests and the ECE 29 test is a measure of whether the “survival space” inside the cab is compromised, all doors remain shut, and the cab remained attached to the chassis frame in at least one location. The Pierce cab met all of the Performance Criteria requirements on all 3 integrity tests.

Witnessed and certified by:

Pierce Manufacturing, Inc.

David W Archer
Vice President of Engineering

PIERCE MANUFACTURING INC.®

AN OSHKOSH CORPORATION® COMPANY

Certification Document CD0137
Saber®FR – Enforcer™
Cab Doors

Pierce Manufacturing certifies the integrity of the Saber®FR – Enforcer™ cab doors.

Specimens representing the substantial structural configuration of the Saber®FR – Enforcer™ cab front and crew doors have been successfully tested to meet the following objectives:

OBJECTIVES:

- Survive a 200,000-cycle door slam test with a slam acceleration up to 20 g's on one representative
- Validate the assembly concept of the main structure of the door by evaluating the durability of the bonding technique.
- Evaluate components, structure, and mounting of the door during and the end of the test for fatigue and failure to ensure durability.
- Verify that the door seals function properly at the end of the test.
- Evaluate the new extrusions and castings of the cab doorframe during and at the end of the test for fatigue, failure, and deformation of seal flanges.
- Evaluate various mounting options for the electronic control module for durability during portions of the slam test.

CONCLUSIONS:

- The door structure and doorframe successfully completed a 200,000-cycle door slam test with a door slam acceleration of 20 g's.

VALIDATION TEST: RD2425

Pierce Manufacturing, Inc.

David Archer
November 18, 2014

Certification Document CD0132
Saber®FR – Enforcer™
Windshield Wiper System

Pierce Manufacturing certifies the integrity of the Saber® FR –Enforcer™ Windshield Wiper System.

Specimens representing the configuration of the Saber® FR –Enforcer™ windshield wipers have been successfully tested to meet the following objectives:

OBJECTIVES:

- Complete 3,000,000 cycles of windshield wiper operation per SAE J198 § 6.2
- Inspect wiper motor, pivots, linkages, and mounts frequently to validate cumulative wiper system integrity.

CONCLUSIONS:

- The wiper linkage, pivots, and mounts successfully completed the 3,000,000 cycles.

VALIDATION TEST: RD2462

Pierce Manufacturing, Inc.

David Archer
Vice President of Engineering

Certification Document CD0133
Saber® FR – Enforcer™
Window Regulators

Pierce Manufacturing certifies the integrity of the Saber ®FR – Enforcer™ window regulators.

Specimens representing the substantial structural configuration of the Saber®FR – Enforcer™ window regulators have been successfully tested to meet the following objectives:

OBJECTIVES:

- Electric window regulators withstand 30,000 up-down cycles.

CONCLUSIONS:

- The electric window regulators withstood 30,000 cycles without failure.

VALIDATION TEST: RD2425

Pierce Manufacturing, Inc.

David Archer
Vice President of Engineering

Certification Document CD0134
Saber® FR – Enforcer™
Seats and Seat Belts

Pierce Manufacturing certifies the conformance of the Saber® FR – Enforcer™ cab seats and seat belts to Federal Motor Vehicle Safety Standards. Representative Saber® FR – Enforcer™ Seat and Seat Belt designs have been tested successfully in accordance with FMVSS 207.

Physical testing was performed to qualify passenger seats to meet Federal Motor Vehicle Safety Standards (FMVSS) 207 and 210. This requires that a minimum of 3,000 lbf be applied to both the lap and shoulder belts via appropriate body blocks. A third force of twenty times the mass of the seat must be applied at the center-of-gravity (CG) of the seat. All three forces are applied at the same time, reached within thirty seconds of the start of the test, and be held for a minimum of ten seconds.

A force equal to twenty times the mass of the seat was applied to each seat in the direction opposite to the combination pull. A moment of 275 lb-ft was applied to the seat with reference to the H-point.

This testing ensures that the seat mounting and seat belt anchors are adequate to retain the seats and occupants in a crash. The Federal requirements are based on the high deceleration rates of passenger vehicles, so the design requirements are significantly more conservative considering the slower crash speeds of heavy trucks.

VALIDATION TESTS: RD2397

Pierce Manufacturing, Inc.

David Archer
Vice President of Engineering

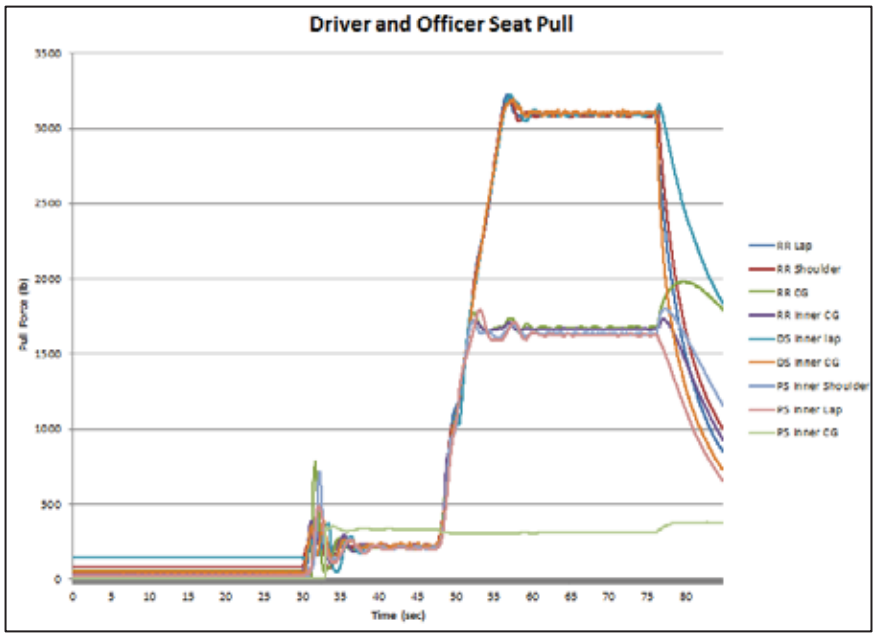

PIERCE MANUFACTURING INC.®

AN OSHKOSH CORPORATION® COMPANY

Certification Document CD0167
Saber® FR - Enforcer™
Air Conditioning & Defrost

Pierce Manufacturing certifies the performance of the Saber®FR - Enforcer™ cab air conditioning and defrost system.

The air conditioning and defrost system was tested successfully in an environmental chamber.

Air Conditioning:
Air conditioning performance testing was conducted at an ambient of 100°F and 50 percent relative humidity. The engine speed was maintained at 1000 RPM with the QP21 compressor

The vehicle was heat soaked in the environmental chamber. All temperature probes were monitored to confirm temperature stabilization. The transient test began when all the vehicle doors were closed, and the air conditioning turned on.

The average cab temperature dropped to a maximum of 72.1°F within 30 minutes.

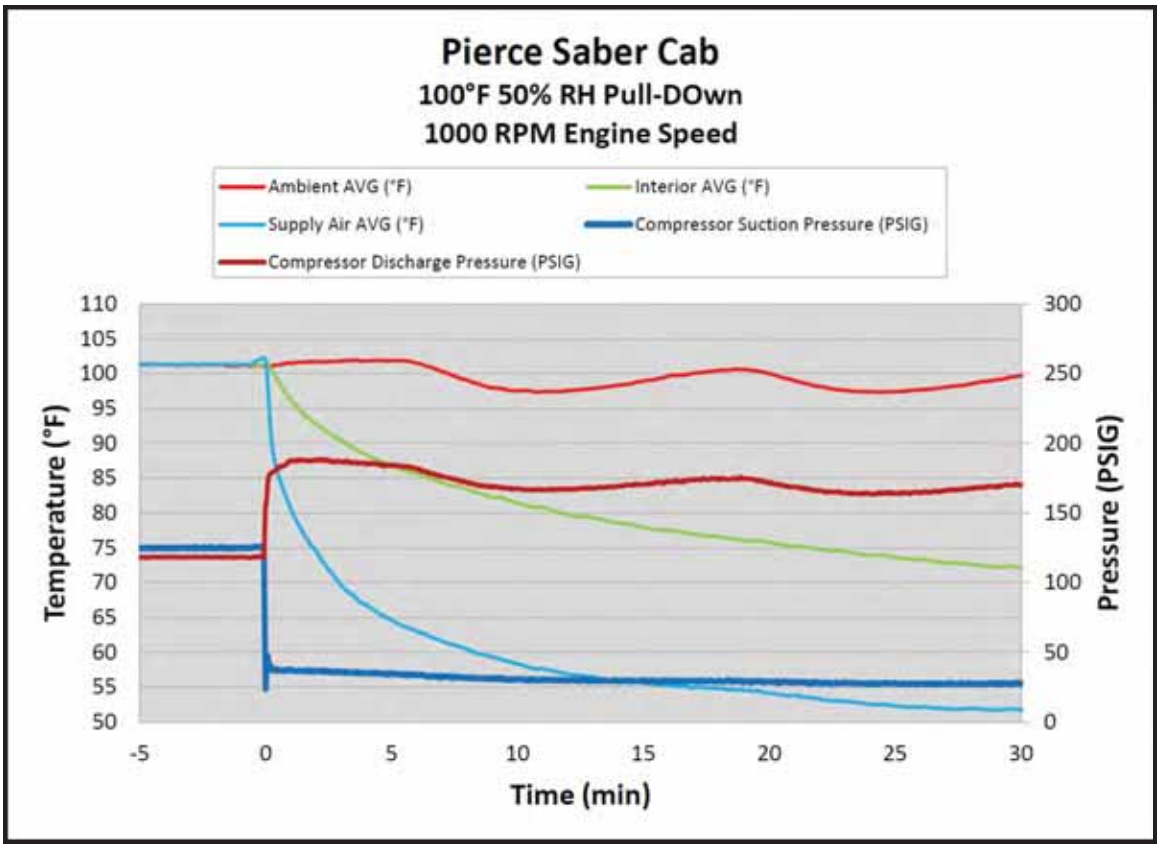

Defrosting

Defroster testing was performed in accordance with *SAE J381 Windshield Defrosting Systems Test Procedure and Performance Requirements-Trucks, Buses, and Multipurpose Vehicles.*

This SAE Recommended Practice establishes uniform test procedures and performance requirements for the defrosting system of enclosed cab trucks, buses, and multipurpose vehicles. Current engineering practice prescribes that for laboratory evaluation of defroster systems, an ice coating of known thickness be applied to the windshield and left- and right-hand side windows to provide more uniform and repeatable test results, even though under actual conditions such a coating would necessarily be scraped off before driving. The test condition, therefore, represents a more severe condition than the actual condition, where the defroster system must merely be capable of maintaining a cleared viewing area.

During the test, the vehicle is cold soaked to 0º F in a cold chamber. A prescribed layer of ice is applied to the windshield. The defroster is then run, and the advancing melt boundary marked as the test proceeds.

The SAE prescribed area of the windshield was 100% cleared and the side windows were 75% cleared within the specified 30-minute period.

Defrost Results

Start of Test

15 Minutes

30 Minutes

Right Viewed From Outside Left

VALIDATION TEST: MCC Test Report TR#19-0047 R00

Pierce Manufacturing, Inc.

David W. Archer
Vice President of Engineering

PIERCE MANUFACTURING INC.®

AN OSHKOSH CORPORATION® COMPANY

Certification Document CD0174
Saber® FR – Enforcer™
Cab Heater

Pierce Manufacturing, in conjunction with Mobile Climate Control, Inc., certifies the performance of the Saber® FR – Enforcer™ cab heat systems.

The Saber®FR - Enforcer™ Heater System was tested successfully in an environmental chamber.

Heater testing was performed using the coolant supply procedures from SAE J381. The average cab temperature increased 82.3º F from -10º F to 72.3º F within the prescribed 30 minutes utilizing the right side under seat auxiliary heater. The cab was contained in a cold chamber at -10º F during the duration of the test.

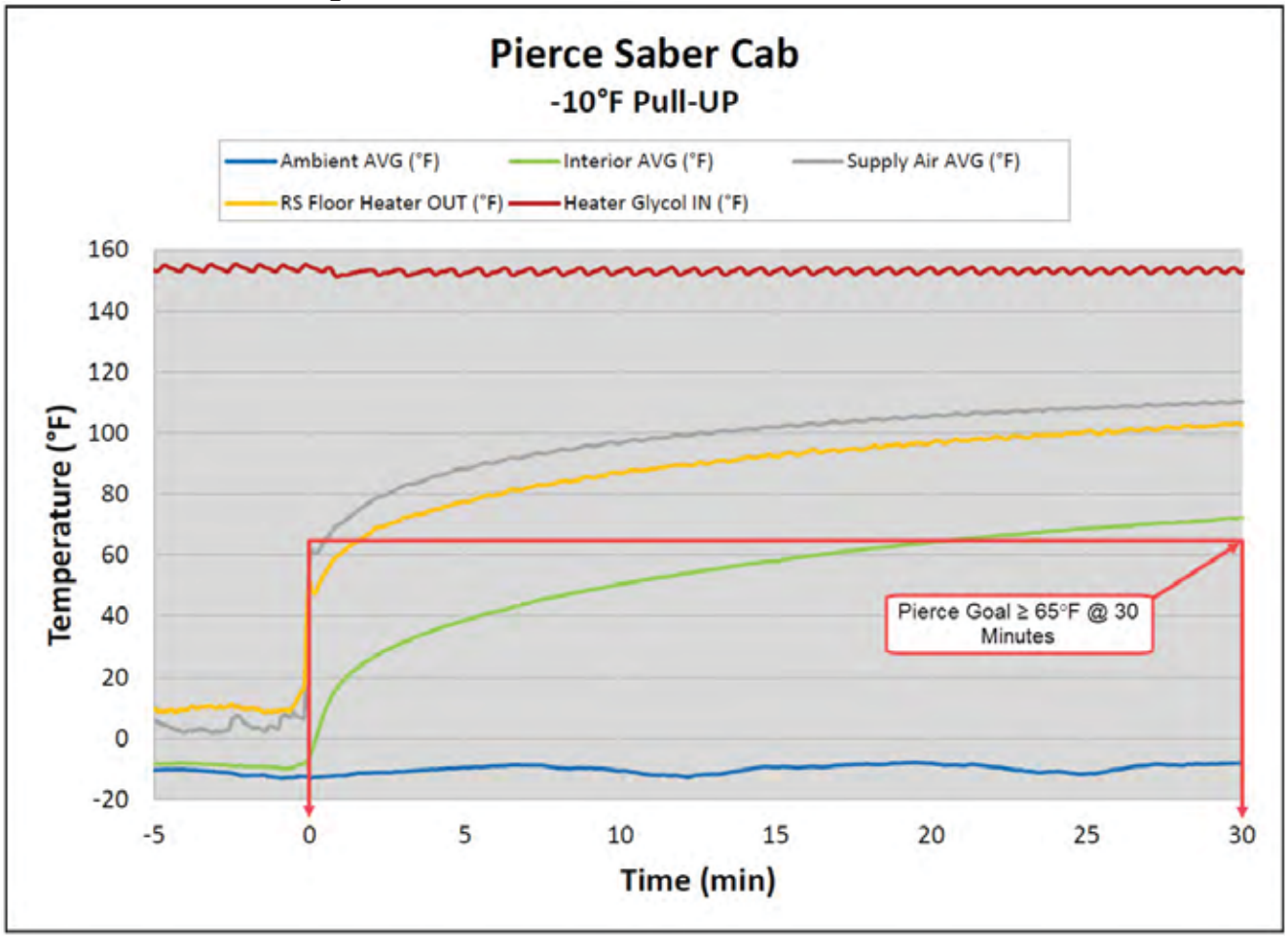

VALIDATION TEST: TR#19-0047 R00

Pierce Manufacturing, Inc.

David Archer
Vice President of Engineering

Mobile Climate Control, Inc.

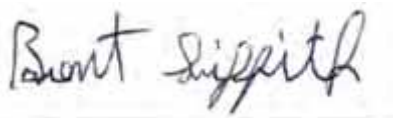

Brent Griffith
Lead Test Engineer & Large Application Specialist

PIERCE MANUFACTURING INC.®

AN OSHKOSH CORPORATION® COMPANY

Certification Document CD0175
Saber® FR - Enforcer™
Air Conditioning & Defrost

Pierce Manufacturing, in conjunction with Mobile Climate Control, Inc., certifies the performance of the Saber®FR - Enforcer™ cab air conditioning and defrost system.

The air conditioning and defrost system was tested successfully in an environmental chamber.

Air Conditioning:
Air conditioning performance testing was conducted at an ambient of 100°F and 50 percent relative humidity. The engine speed was maintained at 1000 RPM with the QP21 compressor

The vehicle was heat soaked in the environmental chamber. All temperature probes were monitored to confirm temperature stabilization. The transient test began when all the vehicle doors were closed, and the air conditioning turned on.

The average cab temperature dropped to a maximum of 72.1°F within 30 minutes.

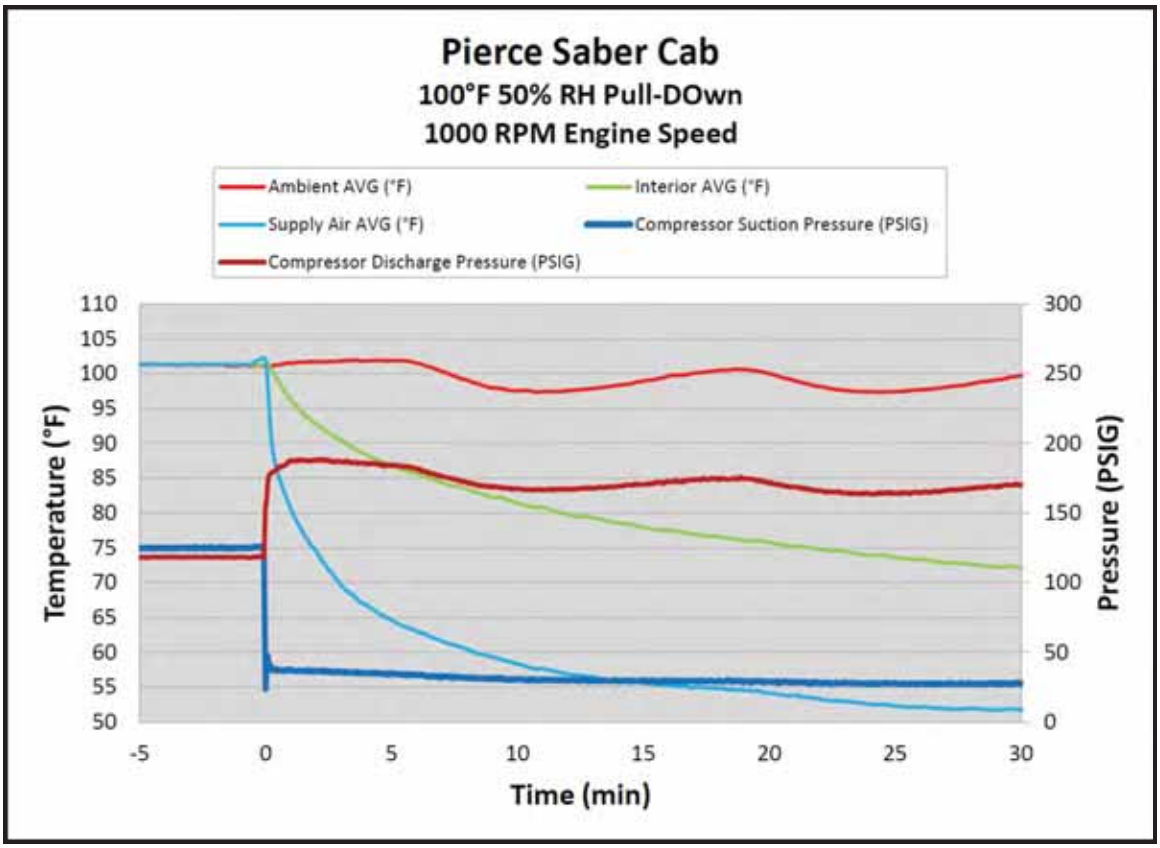

Defrosting

Defroster testing was performed in accordance with *SAE J381 Windshield Defrosting Systems Test Procedure and Performance Requirements-Trucks, Buses, and Multipurpose Vehicles.*

This SAE Recommended Practice establishes uniform test procedures and performance requirements for the defrosting system of enclosed cab trucks, buses, and multipurpose vehicles. Current engineering practice prescribes that for laboratory evaluation of defroster systems, an ice coating of known thickness be applied to the windshield and left- and right-hand side windows to provide more uniform and repeatable test results, even though under actual conditions such a coating would necessarily be scraped off before driving. The test condition, therefore, represents a more severe condition than the actual condition, where the defroster system must merely be capable of maintaining a cleared viewing area.

During the test, the vehicle is cold soaked to 0º F in a cold chamber. A prescribed layer of ice is applied to the windshield. The defroster is then run, and the advancing melt boundary marked as the test proceeds.

The SAE prescribed area of the windshield was 100% cleared and the side windows were 75% cleared within the specified 30-minute period.

Defrost Results

Start of Test

15 Minutes

30 Minutes

Right Viewed From Outside Left

VALIDATION TEST: MCC Test Report TR#19-0047 R00

Pierce Manufacturing, Inc.

David W. Archer
Vice President of Engineering

Mobile Climate Control, Inc.

Brent Griffith
Lead Test Engineer & Large Application Specialist

PIERCE MANUFACTURING INC.®

AN OSHKOSH CORPORATION® COMPANY

Certification Document CD0165
Saber® FR – Enforcer™
Cab Heater

Pierce Manufacturing certifies the performance of the Saber® FR – Enforcer™ cab heat systems.

The Saber®FR - Enforcer™ Heater System was tested successfully in an environmental chamber.

Heater testing was performed using the coolant supply procedures from SAE J381. The average cab temperature increased 82.3º F from -10º F to 72.3º F within the prescribed 30 minutes utilizing the right side under seat auxiliary heater. The cab was contained in a cold chamber at -10º F during the duration of the test.

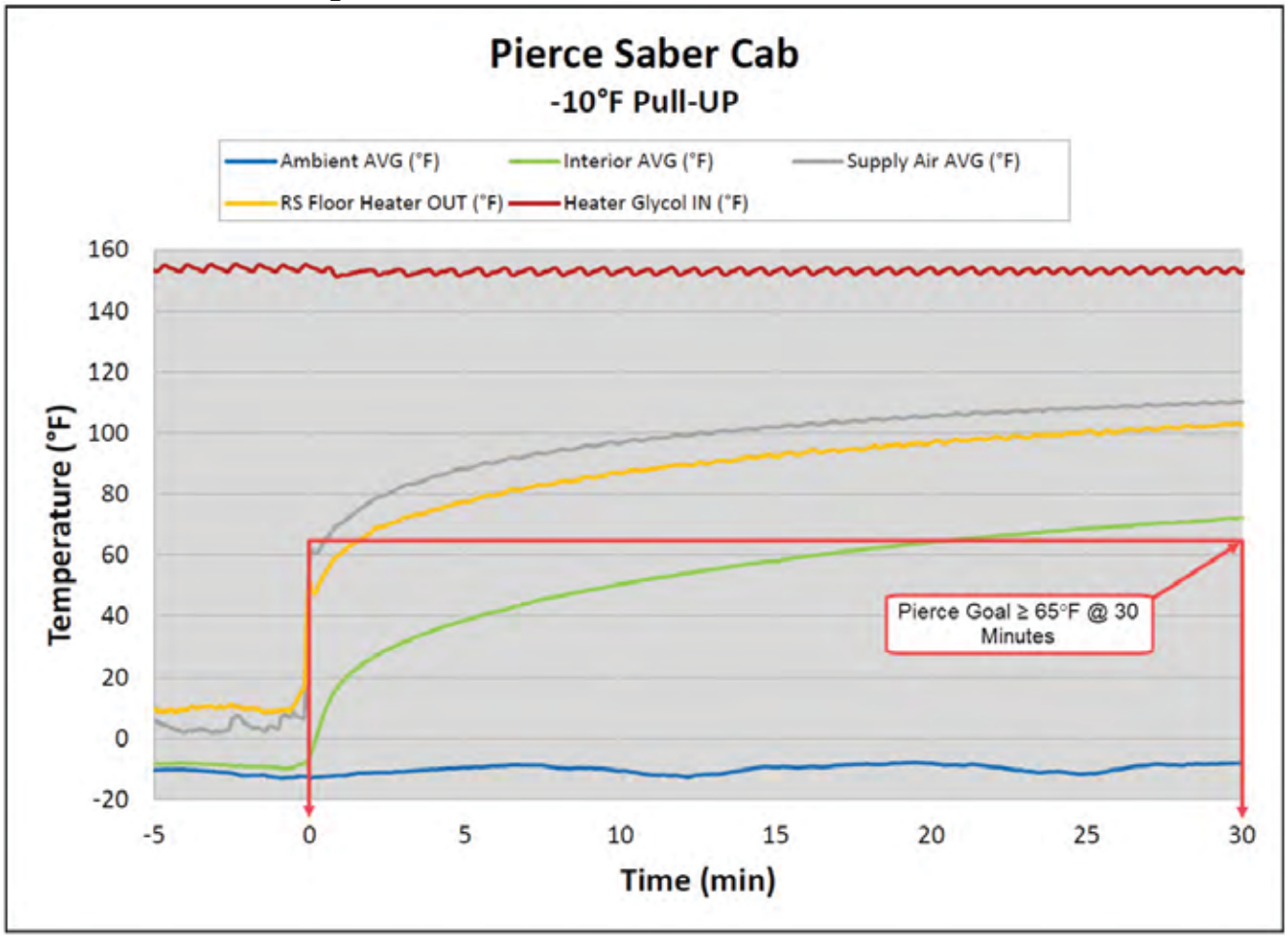

VALIDATION TEST: TR#19-0047 R00

Pierce Manufacturing, Inc.

David Archer
Vice President of Engineering

4 PRODUCT WARRANTIES

Exhibit "C"

Fire and Rescue Apparatus

One (1) Year Material and Workmanship

Basic Apparatus

Limited Warranty

1. LIMITED WARRANTY

Subject to the limitations and exclusions set forth below, Pierce Manufacturing provides the following warranty to the Buyer:

Coverage:	**Portions of the apparatus manufactured by Pierce shall be free from defects in material and workmanship**
Warranty Begins:	**The date the apparatus is placed in service, or 60 days from the original buyer invoice date, whichever comes first.**
Warranty Period Ends After:	**Twelve (12) months.**
Conditions and Exclusions: **See Also Paragraphs 2 thru 4**	**No specific exclusions apply**

This limited warranty shall apply only if the product is properly maintained in accordance with Pierce's maintenance instructions and manuals and is used in service which is normal to the particular model. Normal service means service which does not subject the product to stresses or impacts greater than normally result from careful use. If the Buyer discovers a defect or nonconformity, it must notify Pierce in writing within thirty (30) days after the date of discovery, but in any event prior to the expiration of the warranty period. THIS LIMITED WARRANTY MAY NOT BE ASSIGNED OR OTHERWISE TRANSFERRED BY THE BUYER TO ANY SUBSEQUENT USER OR PURCHASER OR TO ANY OTHER PERSON OR ENTITY.

Notwithstanding anything to the contrary herein, Pierce makes no warranty whatsoever as to:

(a) any integral parts, components, attachments or trade accessories of or to the product that are not manufactured by Pierce, including but not limited to engines, transmissions, drivelines, axles, water pumps and generators; with respect to all such parts, components, attachments and accessories, Pierce shall assign to Buyer the applicable warranties, if any, made by the respective manufacturers thereof;

(b) any vehicle, chassis, or component, part, attachment or accessory damaged by misuse, neglect, fire, exposure to severe environmental or chemical conditions, acidic environment, improper maintenance, accident, crash, or force majeure such as natural disaster, lightning, earthquake, windstorm, hail, flood, war or riot;

(c) any vehicle, chassis or component, part, attachment or accessory that has been repaired, altered or assembled in any way by any person or entity other than Pierce which, in the sole judgment of Pierce, adversely affects the performance, stability or purpose for which it was manufactured; or

(d) products or parts which may in the ordinary course wear out and have to be replaced during the warranty period, including, but not limited to, tires, fluids, gaskets and light bulbs. Pierce assumes no responsibility for the assembly of its parts or subassemblies into finishing products or vehicles unless the assembly is performed by Pierce.

The original purchaser may void this warranty in part or in its entirety if the product is repaired or replaced (a) without prior written approval of the Pierce Customer Service Department; or (b) at a facility which has not been approved by Pierce as to technical capability. Any repairs, modifications, alterations or aftermarket parts added after manufacture without the authorization of Pierce may void this warranty.

2. DISCLAIMERS OF WARRANTIES

THE WARRANTY SET FORTH IN PARAGRAPH 1 IS THE SOLE AND EXCLUSIVE WARRANTY GIVEN BY PIERCE. PIERCE HEREBY DISCLAIMS AND EXCLUDES ALL OTHER WARRANTIES, WHETHER EXPRESS, IMPLIED OR STATUTORY, INCLUDING WITHOUT LIMITATION ANY WARRANTY OF MERCHANTABILITY, ANY WARRANTY OF FITNESS FOR A PARTICULAR PURPOSE, AND ANY WARRANTIES ARISING FROM COURSE OF DEALING OR USAGE OF TRADE.

3. BUYER'S EXCLUSIVE REMEDY.

If the product fails to conform to the warranty set forth in paragraph 1 during the warranty period, and such nonconformity is not due to misuse, neglect, accident or improper maintenance, Buyer must notify Pierce within the time period specified in paragraph 1, and shall make the product available for inspection by Pierce or its designated agent. At the request of Pierce, any allegedly defective product shall be returned to Pierce by Buyer for examination and/or repair. Buyer shall be responsible for the cost of such transportation, and for risk of loss of or damage to the product during transportation. Within a reasonable time, Pierce shall repair or replace (at Pierce's option and expense) any nonconforming or defective parts. Repair or replacement shall be made only by a facility approved in advance in writing by Pierce. THIS REMEDY SHALL BE THE EXCLUSIVE AND SOLE REMEDY FOR ANY BREACH OF WARRANTY.

4. EXCLUSION OF CONSEQUENTIAL AND INCIDENTAL DAMAGES.

Notwithstanding anything to the contrary herein or in any agreement between Pierce and Buyer, IN NO EVENT SHALL PIERCE BE LIABLE FOR ANY CONSEQUENTIAL, INCIDENTAL, SPECIAL, INDIRECT, OR PUNITIVE DAMAGES WHATSOEVER, WHETHER ARISING OUT OF BREACH OF CONTRACT, WARRANTY, TORT (INCLUDING NEGLIGENCE AND STRICT LIABILITY) OR OTHER THEORY OF LAW OR EQUITY, WITH RESPECT TO VEHICLES OR OTHER PRODUCTS SOLD BY PIERCE, OR THEIR OPERATION OR FAILURE TO OPERATE, OR ANY DEFECTS THEREIN, OR ANY UNDERTAKINGS, ACTS OR OMISSIONS RELATED THERETO, REGARDLESS OF WHETHER PIERCE HAS BEEN INFORMED OF THE POSSIBILITY OF ANY SUCH DAMAGES. Without limiting the generality of the foregoing, Pierce specifically disclaims any liability for property or personal injury damages, penalties, damages for lost profits or revenues, loss of vehicles or products or any associated equipment, cost of substitute vehicles or products, down-time, delay damages, any other types of economic loss, or for any claims by any third party for any such damages.

Note: Any Surety Bond, if a part of the sale of the vehicle as to which this limited warranty is provided, applies only to this Pierce Basic One Year Limited Warranty for such vehicle, and not to other warranties made by Pierce in a separate document (if any) or to the warranties (if any) made by any manufacturer (other than Pierce) of any part, component, attachment or accessory that is incorporated into or attached to the vehicle.

Cummins Warranty

Worldwide
Fire Apparatus/Crash Trucks

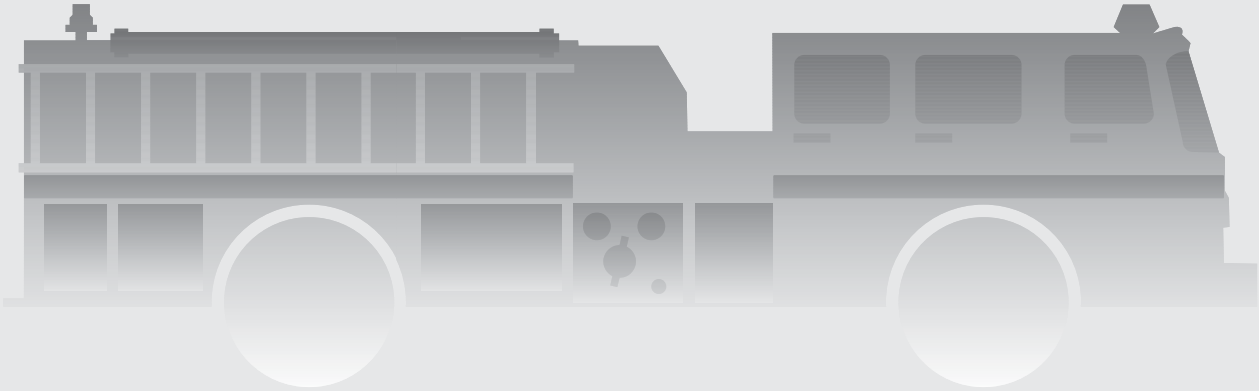

Coverage

Products Warranted

This Warranty applies to new diesel Engines sold by Cummins and delivered to the first user on or after April 1, 2007, that are used in fire apparatus truck and crash truck* applications Worldwide.

Base Engine Warranty

The Base Engine Warranty covers any failures of the Engine which result, under normal use and service, from a defect in material or factory workmanship (Warrantable Failure). This Coverage begins with the sale of the Engine by Cummins and ends five years or 100,000 miles (160,935 kilometers), whichever occurs first, after the date of delivery of the Engine to the first user.

Engine aftertreatment components included in the Cummins Critical Parts List (CPL) and marked with a Cummins part number are covered under Base Engine Warranty.

Additional Coverage is outlined in the Emission Warranty section.

These Warranties are made to all Owners in the chain of distribution and Coverage continues to all subsequent Owners until the end of the periods of Coverage.

Cummins Responsibilities

Cummins will pay for all parts and labor needed to repair the damage to the Engine resulting from a Warrantable Failure.

Cummins will pay for the lubricating oil, antifreeze, filter elements, belts, hoses and other maintenance items that are not reusable due to the Warrantable Failure.

Cummins will pay for reasonable labor costs for Engine removal and reinstallation when necessary to repair a Warrantable Failure.

Cummins will pay reasonable costs for towing a vehicle disabled by a Warrantable Failure to the nearest authorized repair location. In lieu of the towing expense, Cummins will pay reasonable costs for mechanics to travel to and from the location of the vehicle, including meals, mileage and lodging when the repair is performed at the site of the failure.

Owner Responsibilities

Owner is responsible for the operation and maintenance of the Engine as specified in Cummins Operation and Maintenance Manuals. Owner is also responsible for providing proof that all recommended maintenance has been performed.

Before the expiration of the applicable Warranty, Owner must notify a Cummins distributor, authorized dealer or other repair location approved by Cummins of any Warrantable Failure and make the Engine available for repair by such facility. Except for Engines disabled by a Warrantable Failure, Owner must also deliver the Engine to the repair facility.

Service locations are listed on the Cummins Worldwide Service Locator at cummins.com.

Owner is responsible for the cost of lubricating oil, antifreeze, filter elements and other maintenance items provided during Warranty repairs unless such items are not reusable due to the Warrantable Failure.

Owner is responsible for communication expenses, meals, lodging and similar costs incurred as a result of a Warrantable Failure.

Owner is responsible for non-Engine repairs and for ‘‘downtime’’ expenses, cargo damage, fines, all applicable taxes, all business costs and other losses resulting from a Warrantable Failure.

Owner is responsible for a $100 (U.S. Dollars) deductible per each service visit under this plan in the 3rd, 4th and 5th years of Base Engine Warranty. The deductible will not be charged during the first 2 years of the Base Engine Warranty.

Limitations

Cummins is not responsible for failures or damage resulting from what Cummins determines to be abuse or neglect, including, but not limited to: operation without adequate coolants or lubricants; overfueling; overspeeding; lack of maintenance of lubricating, cooling or intake systems; improper storage, starting, warm-up, run-in or shutdown practices; unauthorized modifications of the Engine.

Any unauthorized modifications to the aftertreatment could negatively effect emissions certification and void Warranty.

Cummins is also not responsible for failures caused by incorrect oil, fuel or diesel exhaust fluid or by water, dirt or other contaminants in the fuel, oil or diesel

exhaust fluid.

This Warranty does not apply to accessories supplied by Cummins which bear the name of another company. Such non-warranted accessories include, but are not limited to: alternators, starters, fans, air conditioning compressors, clutches, filters, transmissions, torque converters, vacuum pumps, power steering pumps, fan drives and air compressors. Cummins branded alternators and starters are covered for the first two years from the date of delivery of the Engine to the first user, or the expiration of the Base Engine Warranty, whichever occurs first.

Failures resulting in excessive oil consumption are not covered beyond the duration of the Coverage or 100,000 miles (160,935 kilometers) or 7,000 hours from the date of delivery of the Engine to the first user, whichever of the three occurs first. Before a claim for excessive oil consumption will be considered, Owner must submit adequate documentation to show that consumption exceeds Cummins published standards.

Failures of belts and hoses supplied by Cummins are not covered beyond the first year from the date of delivery of the Engine to the first user or the duration of the Warranty, whichever occurs first.

Parts used to repair a Warrantable Failure may be new Cummins parts, Cummins approved rebuilt parts or repaired parts. Cummins is not responsible for failures resulting from the use of parts not approved by Cummins.

A new Cummins or Cummins approved rebuilt part used to repair a Warrantable Failure assumes the identity of the part it replaced and is entitled to the remaining Coverage hereunder.

Cummins Inc. reserves the right to interrogate Electronic Control Module (ECM) data for purposes of failure analysis.

CUMMINS DOES NOT COVER WEAR OR WEAROUT OF COVERED PARTS.

CUMMINS IS NOT RESPONSIBLE FOR INCIDENTAL OR CONSEQUENTIAL DAMAGES.

THIS WARRANTY AND THE EMISSION WARRANTY SET FORTH HEREINAFTER ARE THE SOLE WARRANTIES MADE BY CUMMINS IN REGARD TO THESE ENGINES. CUMMINS MAKES NO OTHER WARRANTIES, EXPRESS OR IMPLIED, OR OF MERCHANTABILITY OR FITNESS FOR A PARTICULAR PURPOSE.

This Warranty gives you specific legal rights, and you may also have other rights which vary from state to state.

Emission Warranty

Products Warranted

This Emission Warranty applies to new Engines marketed by Cummins that are used in the United States** in vehicles designed for transporting persons or property on a street or highway. This Warranty applies to Engines delivered to the first user on or after September 1, 1992.

Coverage

Cummins warrants to the first user and each subsequent purchaser that the Engine is designed, built and equipped so as to conform at the time of sale by Cummins with all U.S. federal emission regulations applicable at the time of manufacture and that it is free from defects in material or factory workmanship which would cause it not to meet these regulations within the longer of the following periods: (A) Five years or 100,000 miles (160,935 kilometers) of operation, whichever occurs first, as measured from the date of delivery of the Engine to the first user or (B) The Base Engine Warranty.

If the vehicle in which the Engine is installed is registered in the state of California, a separate California Emission Warranty also applies.

Limitations

Failures, other than those resulting from defects in material or factory workmanship, are not covered by this Warranty.

Cummins is not responsible for failures or damage resulting from what Cummins determines to be abuse or neglect, including, but not limited to: operation without adequate coolants or lubricants; overfueling; overspeeding; lack of maintenance of lubricating, cooling or intake systems; improper storage, starting, warm-up, run-in or shutdown practices; unauthorized modifications of the Engine.

Any unauthorized modifications to the aftertreatment could negatively effect emissions certification and void Warranty.

Cummins is also not responsible for failures caused by incorrect oil, fuel or diesel exhaust fluid or by water, dirt or other contaminants in the fuel, oil or diesel exhaust fluid.

Cummins is not responsible for non-Engine repairs, ‘‘downtime’’ expenses, cargo damage, fines, all applicable taxes, all business costs or other losses resulting from a Warrantable Failure.

CUMMINS IS NOT RESPONSIBLE FOR INCIDENTAL OR CONSEQUENTIAL DAMAGES.

* Airport operated crash trucks and fire department operated trucks employed to respond to fires, hazardous material releases, rescue and other emergency-type situations.

** United States includes American Samoa, the Commonwealth of Northern Mariana Islands, Guam, Puerto Rico and the U.S. Virgin Islands.

Cummins Inc.
Box 3005
Columbus, IN 47202-3005
U.S.A.

Bulletin 3381161
Printed in U.S.A. Rev. 08/09
©2001 Cummins Inc.

R. H. SHEPPARD CO., INC.
101 Philadelphia St.
Hanover, PA 17331
Pierce Manufacturing Inc.
2600 American Drive
Appleton, WI 54912

LIMITED WARRANTY: The R. H. Sheppard Co. Inc., ("Sheppard") warrants all M110PKG1 and M110SAU1 steering gears manufactured and sold to Pierce Manufacturing Inc. ("Pierce") for application on Pierce TAK-4 equipped vehicles to be free from defects of workmanship and material under normal use and service for a period of thirty six months from the in service date of the vehicle to its original owner.

Vehicle applications where Sheppard product is used require an application approval before production build. If Pierce uses Sheppard product for any purpose or application which has not been approved by Sheppard in advance, including aftermarket devices (defined as a device added to the steering system directly or indirectly affecting the performance or operation of the Sheppard product in its approved application) not tested and approved by Sheppard this limited warranty SHALL NOT APPLY AND SHALL BE VOID. SHEPPARD MAKES NO OTHER WARRANTY, EITHER EXPRESS OR IMPLIED. SHEPPARD EXPRESSLY DISCLAIMS ANY WARRANTY OF MERCHANTABILITY OR FITNESS FOR ANY PARTICULAR USE OR PURPOSE WHICH EXTEND BEYOND THE DESCRIPTION ON THE FACE HEREOF.
SHEPPARD SHALL NOT BE LIABLE FOR ANY CONSEQUENTIAL, SPECIAL OR INDIRECT DAMAGES OR FOR LOSS OR DAMAGE DIRECTLY OR INDIRECTLY ARISING FROM THE USE OF A PRODUCT. Pierce expressly acknowledges its obligation to inform all users (customers) of the above disclaimer.

CONDITIONS: Claims under this Limited Warranty may only be made by Pierce. In no event shall Sheppard be held liable for warranty charges by unauthorized persons. No allowance will be made for repairs or alterations, unless made with the written consent of Sheppard. Authorized Pierce dealers shall be the only authorized repair facility for Sheppard products applied to Pierce vehicles. Any warrantable repair made under this Limited Warranty must be made on or before 36 months of the in-service date for the Product to which the claim relates. Sheppard shall not be liable for claims made after such date. Sheppard product fitted to Pierce vehicles that are repaired at a repair facility other than an authorized Pierce dealer within the warranty period will be considered for payment under the guidelines of this agreement only by joint written consideration of Sheppard and Pierce warranty departments. It shall be the responsibility of the Pierce warranty department to notify Sheppard if and when this situation occurs. Sheppard will not be held responsible for damage to other steering components such as but not limited to pumps and reservoirs due to improper adjustment of steering gear relief plungers. Vehicle downtime and towing will not be considered under warranty.

REMEDIES: The sole and exclusive remedy of Pierce for Sheppard's breach of the foregoing warranty is limited to the return and repair or reimbursement as follows:

Warranty Support: In support of the Pierce dealer network, Sheppard will provide a toll-free "Hotline" service to assist in the diagnosis and troubleshooting of steering problems. The R. H. Sheppard Co., Inc. Field Service Department can be reached at 1-800-274-7437 for assistance. Sheppard will require that Pierce dealers contact this toll-free "Hotline" for approval before product is removed from a vehicle in a warranty situation. When contacted regarding a warranty situation, the Sheppard representative will provide an authorization number for removal of the product. This Returned Goods Authorization (RGA) number must be included in all warranty correspondence and attached to all returned goods.

Procedure: In the event of a warranty situation, the servicing dealer shall contact the Sheppard Hotline and receive an RGA number before replacing any steering gear. For M110PKG1 and M110SAU1 steering gear models, the dealer will first obtain an RGA number from Sheppard, and then order the replacement gear from Pierce. Replacement M110PKG1 and M110SAU1 steering gears shall be shipped from Pierce once those models are in full production. A warranty claim for both parts and labor will then be generated by the dealer and sent to Pierce. After reviewing the claim, Pierce will submit it to Sheppard for reimbursement.

Parts Reimbursement: Sheppard agrees to reimburse Pierce at Pierce's purchase price plus 30% mark-up for parts found to be defective within the warranty period. Parts being returned for warranty consideration shall be sent to the R. H. Sheppard Company, 447 E. Middle St., Hanover, PA 17331 ATTN: Warranty Dept. Sheppard's determination as to whether the part is covered by the foregoing warranty is final and conclusive. Sheppard requires the return of complete steering gears only. Individual seals replaced under warranty **should not** be returned unless specifically requested by Sheppard. All parts being returned for warranty consideration must be clearly tagged with all pertinent warranty information including, but not limited to (1) Returned Goods Authorization number (RGA); (2) claim number; (3) date in service; (4) date of failure; (5) mileage; (6) part number; (7) labor hours; (8) dealer labor rate and; (9) dollar amount claimed. Claims submitted without prior authorization are subject to rejection under this agreement.

Labor: Labor to repair Sheppard product found to be defective within the warranty period will be reimbursed at not more than 10 hours per vehicle. Labor shall be reimbursed at the rate of $85.00 USD per hour for M110PGK1 and M110SAU1 steering gears.

Freight: Pierce will collect M110PGK1 and M110SAU1 warranty material at a designated collection point. Inbound freight to the Pierce collection point will be the responsibility of Pierce. All warranty material should be returned from the Pierce collection point to R. H. Sheppard Co. Freight Collect by a Sheppard-specified common carrier based on location of the Pierce collection point. Sheppard does not require the return of failed seals. Any freight charges incurred for the return of seals will be the responsibility of Pierce. Parts returned for warranty consideration without prior authorization are subject to rejection under this agreement and may be subject to a charge back of inbound freight charges. Parts rejected under this warranty will be returned to Pierce Freight Collect or scrapped by Sheppard at Pierce's discretion.

Outside Purchases: Pierce authorized dealers shall be the only outlet for repair, warranty service and parts for Sheppard products applied to Pierce vehicles. Sheppard will not be responsible for consumables such as hoses, belts, fluids, fittings or miscellaneous shop material that may be required for the repair of the product.

Warranty Documentation: Warranty credit memos will be issued monthly to the Pierce Warranty Department. Monthly credit memos will include (1) claim number; (2) part number; (3) parts reimbursement; (4) labor reimbursement; (5) any applicable Pierce reference number and; (6) reason for rejection or acceptance of the claim. Credit memos will be issued in U.S. funds. Debits for warranty claims will not be accepted under this agreement. Claim disposition will constitute the final and conclusive resolution of warranty claims.

Parts Retention: Sheppard will retain parts submitted for warranty consideration for a period of sixty (60) days for any material found to be rejected for warranty. Sheppard will notify Pierce within sixty (60) days of receipt of Sheppard's determination as to whether any such part is covered by this warranty. Warranty reimbursement will be issued within thirty days of receipt of material at Sheppard.

Good-Will Requests: Good-Will requests will be considered jointly between Sheppard and Pierce for equitable compensation.

RECALLS: Sheppard retains the right to review information regarding federal motor vehicle recall and /or product repair programs if Sheppard products fitted to Pierce vehicles are alleged to be non-compliant with federal motor vehicle safety standards. Sheppard retains the right to review any claims of product defect or non-compliance before participating in reimbursement of expenses incurred as a result of alleged non-compliance or defect of its products. Sheppard agrees to negotiate in good faith for the reimbursement of expenses incurred by Pierce for all administrative, material and labor cost and expense associated with any recall where Sheppard product is found to be defective or non-compliant with federal motor vehicle standards.

MISCELLANEOUS: This writing constitutes the full complete and final statement of Sheppard's limited warranty for M110PKG1 and M110SAU1 products sold to Pierce. All prior oral or written correspondence, test data, negotiations, representations, understandings and the like regarding products are merged in this writing and extinguished by it. This limited warranty may not be altered, amended extended or modified except by a writing signed by the President or Vice President of Sheppard. No employee, vendor, dealer, distributor or other representative of Sheppard has authority to make statements to extend, expand, alter or amend the terms of this Limited Warranty. Sheppard expressly disclaims any statements contrary to the Limited Warranty. Sheppard's failure at any time to enforce any of the terms and conditions stated herein shall not constitute a waiver of any provisions herein. This Limited Warranty shall be governed by and construed in accordance with the laws of the Commonwealth of Pennsylvania.

Any legal actions which may arise as a result of disputes, controversies or claims arising out of or related to this limited warranty shall be in such forum as Sheppard and Pierce shall agree, or, in the absence of agreement, in a court of appropriate jurisdiction other than in the county in which either party is located. This Limited Warranty shall not be assigned by Pierce.

COOPERATIVE EFFORT: Sheppard and Pierce agree to work cooperatively toward expanding this warranty coverage to a period of sixty months from the in service date. These cooperative efforts shall focus on examining the effects of increased heat generated by 2007 model engines and its impact on the entire power steering system.

AGREEMENT: This agreement is effective April 3, 2006 and may be modified by mutual agreement between Sheppard and Pierce of a signed amendment to be attached to the original Limited Warranty. There are no third party beneficiaries to this Limited Warranty. This warranty agreement applies to Pierce authorized dealers only. It does not encompass any special arrangements that Pierce may now have or that Pierce may enter into, with any other segments of the trucking industry. This warranty agreement does not apply to non-conforming product removed at Pierce assembly plants.

This Limited Warranty agreement between the R. H. Sheppard Co., Inc and Pierce Manufacturing Inc. may be terminated by either party with thirty days written notice prior to termination.

Signed at Pierce Manufacturing Inc., Appleton, WI this _____ day of _____, 2006.

R. H. SHEPPARD CO., INC.	**PIERCE MANUFACTURING INC.**
_____	_____
Authorized Signature	Authorized Signature
_____	_____
Title	Title

Fire and Rescue Apparatus

Lifetime Fifty (50) Year Structural Integrity Custom Chassis Frame

Limited Warranty

1. LIMITED WARRANTY

Subject to the limitations and exclusions set forth below, Pierce Manufacturing provides the following warranty to the purchaser who first puts the product in service ("Buyer"):

Coverage:	**Custom chassis frame rail manufactured by Pierce shall be free from defects in material and workmanship**
Warranty Begins:	**The date of the original purchase invoice (issued when the product ships from the factory).**
Warranty Period Ends After:	**Fifty (50) Years (Expected Life of Apparatus)**
Conditions and Exclusions: **See Also Paragraphs 2 thru 4**	**This warranty applies to the frame rails only, crossmembers are excluded.** **This warranty does not apply to damage caused by corrosion.**

This limited warranty shall apply only if the product is properly maintained in accordance with Pierce's maintenance instructions and manuals and is used in service which is normal to the particular model. Normal service means service which does not subject the product to stresses or impacts greater than normally result from careful use. If the Buyer discovers a defect or nonconformity, it must notify Pierce in writing within thirty (30) days after the date of discovery, but in any event prior to the expiration of the warranty period. THIS LIMITED WARRANTY MAY NOT BE ASSIGNED OR OTHERWISE TRANSFERRED BY THE BUYER TO ANY SUBSEQUENT USER OR PURCHASER OR TO ANY OTHER PERSON OR ENTITY.

Notwithstanding anything to the contrary herein, Pierce makes no warranty whatsoever as to:

(a) any integral parts, components, attachments or trade accessories of or to the product that are not manufactured by Pierce, including but not limited to engines, transmissions, drivelines, axles, water pumps and generators; with respect to all such parts, components, attachments and accessories, Pierce shall assign to Buyer the applicable warranties, if any, made by the respective manufacturers thereof;

(b) any vehicle, chassis, or component, part, attachment or accessory damaged by misuse, neglect, fire, exposure to severe environmental or chemical conditions, acidic environment, improper maintenance, accident, crash, or force majeure such as natural disaster, lightning, earthquake, windstorm, hail, flood, war or riot;

(c) any vehicle, chassis or component, part, attachment or accessory that has been repaired, altered or assembled in any way by any person or entity other than Pierce which, in the sole judgment of Pierce, adversely affects the performance, stability or purpose for which it was manufactured; or

(d) products or parts which may in the ordinary course wear out and have to be replaced during the warranty period, including, but not limited to, tires, fluids, gaskets and light bulbs. Pierce assumes no responsibility for the assembly of its parts or subassemblies into finishing products or vehicles unless the assembly is performed by Pierce.

The original purchaser may void this warranty in part or in its entirety if the product is repaired or replaced (a) without prior written approval of the Pierce Customer Service Department; or (b) at a facility which has not been approved by Pierce as to technical capability. Any repairs, modifications, alterations or aftermarket parts added after manufacture without the authorization of Pierce may void this warranty.

2. DISCLAIMERS OF WARRANTIES

THE WARRANTY SET FORTH IN PARAGRAPH 1 IS THE SOLE AND EXCLUSIVE WARRANTY GIVEN BY PIERCE. PIERCE HEREBY DISCLAIMS AND EXCLUDES ALL OTHER WARRANTIES, WHETHER EXPRESS, IMPLIED OR STATUTORY, INCLUDING WITHOUT LIMITATION ANY WARRANTY OF MERCHANTABILITY, ANY WARRANTY OF FITNESS FOR A PARTICULAR PURPOSE, AND ANY WARRANTIES ARISING FROM COURSE OF DEALING OR USAGE OF TRADE.

3. BUYER'S EXCLUSIVE REMEDY.

If the product fails to conform to the warranty set forth in paragraph 1 during the warranty period, and such nonconformity is not due to misuse, neglect, accident or improper maintenance, Buyer must notify Pierce within the time period specified in paragraph 1, and shall make the product available for inspection by Pierce or its designated agent. At the request of Pierce, any allegedly defective product shall be returned to Pierce by Buyer for examination and/or repair. Buyer shall be responsible for the cost of such transportation, and for risk of loss of or damage to the product during transportation. Within a reasonable time, Pierce shall repair or replace (at Pierce's option and expense) any nonconforming or defective parts. Repair or replacement shall be made only by a facility approved in advance in writing by Pierce. THIS REMEDY SHALL BE THE EXCLUSIVE AND SOLE REMEDY FOR ANY BREACH OF WARRANTY.

4. EXCLUSION OF CONSEQUENTIAL AND INCIDENTAL DAMAGES.

Notwithstanding anything to the contrary herein or in any agreement between Pierce and Buyer, IN NO EVENT SHALL PIERCE BE LIABLE FOR ANY CONSEQUENTIAL, INCIDENTAL, SPECIAL, INDIRECT, OR PUNITIVE DAMAGES WHATSOEVER, WHETHER ARISING OUT OF BREACH OF CONTRACT, WARRANTY, TORT (INCLUDING NEGLIGENCE AND STRICT LIABILITY) OR OTHER THEORY OF LAW OR EQUITY, WITH RESPECT TO VEHICLES OR OTHER PRODUCTS SOLD BY PIERCE, OR THEIR OPERATION OR FAILURE TO OPERATE, OR ANY DEFECTS THEREIN, OR ANY UNDERTAKINGS, ACTS OR OMISSIONS RELATED THERETO, REGARDLESS OF WHETHER PIERCE HAS BEEN INFORMED OF THE POSSIBILITY OF ANY SUCH DAMAGES. Without limiting the generality of the foregoing, Pierce specifically disclaims any liability for property or personal injury damages, penalties, damages for lost profits or revenues, loss of vehicles or products or any associated equipment, cost of substitute vehicles or products, down-time, delay damages, any other types of economic loss, or for any claims by any third party for any such damages.

Note: Any Surety Bond, if a part of the sale of the vehicle as to which this limited warranty is provided, applies only to this Pierce Basic One Year Limited Warranty for such vehicle, and not to other warranties made by Pierce in a separate document (if any) or to the warranties (if any) made by any manufacturer (other than Pierce) of any part, component, attachment or accessory that is incorporated into or attached to the vehicle.

Fire and Rescue Apparatus

Three (3) Year Material and Workmanship
TAK-4 Independent Front Suspension

Limited Warranty

1. LIMITED WARRANTY

Subject to the limitations and exclusions set forth below, Pierce Manufacturing provides the following warranty to the Buyer:

Coverage:	**The TAK-4 Front Independent Suspension and Steering Gears shall be free from defects in material and workmanship.**
Warranty Begins:	**The date of the original purchase invoice (issued when the product ships from the factory).**
Warranty Period Ends After:	**Three (3) Years -or- 30,000 Miles**
Conditions and Exclusions: **See Also Paragraphs 2 thru 4**	**This limited warranty excludes brake pads, brake rotors, seal boots and shock absorbers.**

This limited warranty shall apply only if the product is properly maintained in accordance with Pierce's maintenance instructions and manuals and is used in service which is normal to the particular model. Normal service means service which does not subject the product to stresses or impacts greater than normally result from careful use. If the Buyer discovers a defect or nonconformity, it must notify Pierce in writing within thirty (30) days after the date of discovery, but in any event prior to the expiration of the warranty period. THIS LIMITED WARRANTY MAY NOT BE ASSIGNED OR OTHERWISE TRANSFERRED BY THE BUYER TO ANY SUBSEQUENT USER OR PURCHASER OR TO ANY OTHER PERSON OR ENTITY.

Notwithstanding anything to the contrary herein, Pierce makes no warranty whatsoever as to:

(a) any integral parts, components, attachments or trade accessories of or to the product that are not manufactured by Pierce, including but not limited to engines, transmissions, drivelines, axles, water pumps and generators; with respect to all such parts, components, attachments and accessories, Pierce shall assign to Buyer the applicable warranties, if any, made by the respective manufacturers thereof;

(b) any vehicle, chassis, or component, part, attachment or accessory damaged by misuse, neglect, fire, exposure to severe environmental or chemical conditions, acidic environment, improper maintenance, accident, crash, or force majeure such as natural disaster, lightning, earthquake, windstorm, hail, flood, war or riot;

(c) any vehicle, chassis or component, part, attachment or accessory that has been repaired, altered or assembled in any way by any person or entity other than Pierce which, in the sole judgment of Pierce, adversely affects the performance, stability or purpose for which it was manufactured; or

(d) products or parts which may in the ordinary course wear out and have to be replaced during the warranty period, including, but not limited to, tires, fluids, gaskets and light bulbs. Pierce assumes no responsibility for the assembly of its parts or subassemblies into finishing products or vehicles unless the assembly is performed by Pierce.

The original purchaser may void this warranty in part or in its entirety if the product is repaired or replaced (a) without prior written approval of the Pierce Customer Service Department; or (b) at a facility which has not been approved by Pierce as to technical capability. Any repairs, modifications, alterations or aftermarket parts added after manufacture without the authorization of Pierce may void this warranty.

2. DISCLAIMERS OF WARRANTIES

THE WARRANTY SET FORTH IN PARAGRAPH 1 IS THE SOLE AND EXCLUSIVE WARRANTY GIVEN BY PIERCE. PIERCE HEREBY DISCLAIMS AND EXCLUDES ALL OTHER WARRANTIES, WHETHER EXPRESS, IMPLIED OR STATUTORY, INCLUDING WITHOUT LIMITATION ANY WARRANTY OF MERCHANTABILITY, ANY WARRANTY OF FITNESS FOR A PARTICULAR PURPOSE, AND ANY WARRANTIES ARISING FROM COURSE OF DEALING OR USAGE OF TRADE.

3. BUYER'S EXCLUSIVE REMEDY.

If the product fails to conform to the warranty set forth in paragraph 1 during the warranty period, and such nonconformity is not due to misuse, neglect, accident or improper maintenance, Buyer must notify Pierce within the time period specified in paragraph 1, and shall make the product available for inspection by Pierce or its designated agent. At the request of Pierce, any allegedly defective product shall be returned to Pierce by Buyer for examination and/or repair. Buyer shall be responsible for the cost of such transportation, and for risk of loss of or damage to the product during transportation. Within a reasonable time, Pierce shall repair or replace (at Pierce's option and expense) any nonconforming or defective parts. Repair or replacement shall be made only by a facility approved in advance in writing by Pierce. THIS REMEDY SHALL BE THE EXCLUSIVE AND SOLE REMEDY FOR ANY BREACH OF WARRANTY.

4. EXCLUSION OF CONSEQUENTIAL AND INCIDENTAL DAMAGES.

Notwithstanding anything to the contrary herein or in any agreement between Pierce and Buyer, IN NO EVENT SHALL PIERCE BE LIABLE FOR ANY CONSEQUENTIAL, INCIDENTAL, SPECIAL, INDIRECT, OR PUNITIVE DAMAGES WHATSOEVER, WHETHER ARISING OUT OF BREACH OF CONTRACT, WARRANTY, TORT (INCLUDING NEGLIGENCE AND STRICT LIABILITY) OR OTHER THEORY OF LAW OR EQUITY, WITH RESPECT TO VEHICLES OR OTHER PRODUCTS SOLD BY PIERCE, OR THEIR OPERATION OR FAILURE TO OPERATE, OR ANY DEFECTS THEREIN, OR ANY UNDERTAKINGS, ACTS OR OMISSIONS RELATED THERETO, REGARDLESS OF WHETHER PIERCE HAS BEEN INFORMED OF THE POSSIBILITY OF ANY SUCH DAMAGES. Without limiting the generality of the foregoing, Pierce specifically disclaims any liability for property or personal injury damages, penalties, damages for lost profits or revenues, loss of vehicles or products or any associated equipment, cost of substitute vehicles or products, down-time, delay damages, any other types of economic loss, or for any claims by any third party for any such damages.

Note: Any Surety Bond, if a part of the sale of the vehicle as to which this limited warranty is provided, applies only to this Pierce Basic One Year Limited Warranty for such vehicle, and not to other warranties made by Pierce in a separate document (if any) or to the warranties (if any) made by any manufacturer (other than Pierce) of any part, component, attachment or accessory that is incorporated into or attached to the vehicle.

Fire and Rescue Apparatus

SUPPLIER

Limited Warranty

1. LIMITED WARRANTY

Subject to the limitations and exclusions set forth below, Pierce Manufacturing provides the following warranty to the purchaser who first puts the product in service ("Buyer"):

Coverage:	**The Meritor axle shall be covered by Meritor as indicated in the attached Meritor warranty coverage description**
Warranty Begins:	**The date of the original purchase invoice (issued when the product ships from the factory).**
Warranty Period Ends After:	**Five (5) Years**
Conditions and Exclusions: **See Also Paragraphs 2 thru 4**	**The exclusions listed in the attached Meritor warranty description shall apply.**

This limited warranty shall apply only if the product is properly maintained in accordance with Pierce's maintenance instructions and manuals and is used in service which is normal to the particular model. Normal service means service which does not subject the product to stresses or impacts greater than normally result from careful use. If the Buyer discovers a defect or nonconformity, it must notify Pierce in writing within thirty (30) days after the date of discovery, but in any event prior to the expiration of the warranty period. THIS LIMITED WARRANTY MAY NOT BE ASSIGNED OR OTHERWISE TRANSFERRED BY THE BUYER TO ANY SUBSEQUENT USER OR PURCHASER OR TO ANY OTHER PERSON OR ENTITY.

Notwithstanding anything to the contrary herein, Pierce makes no warranty whatsoever as to:

(a) any integral parts, components, attachments or trade accessories of or to the product that are not manufactured by Pierce, including but not limited to engines, transmissions, drivelines, axles, water pumps and generators; with respect to all such parts, components, attachments and accessories, Pierce shall assign to Buyer the applicable warranties, if any, made by the respective manufacturers thereof;

(b) any vehicle, chassis, or component, part, attachment or accessory damaged by misuse, neglect, fire, exposure to severe environmental or chemical conditions, acidic environment, improper maintenance, accident, crash, or force majeure such as natural disaster, lightning, earthquake, windstorm, hail, flood, war or riot;

(c) any vehicle, chassis or component, part, attachment or accessory that has been repaired, altered or assembled in any way by any person or entity other than Pierce which, in the sole judgment of Pierce, adversely affects the performance, stability or purpose for which it was manufactured; or

(d) products or parts which may in the ordinary course wear out and have to be replaced during the warranty period, including, but not limited to, tires, fluids, gaskets and light bulbs. Pierce assumes no responsibility for the assembly of its parts or subassemblies into finishing products or vehicles unless the assembly is performed by Pierce.

The original purchaser may void this warranty in part or in its entirety if the product is repaired or replaced (a) without prior written approval of the Pierce Customer Service Department; or (b) at a facility which has not been approved by Pierce as to technical capability. Any repairs, modifications, alterations or aftermarket parts added after manufacture without the authorization of Pierce may void this warranty.

2. DISCLAIMERS OF WARRANTIES

THE WARRANTY SET FORTH IN PARAGRAPH 1 IS THE SOLE AND EXCLUSIVE WARRANTY GIVEN BY PIERCE. PIERCE HEREBY DISCLAIMS AND EXCLUDES ALL OTHER WARRANTIES, WHETHER EXPRESS, IMPLIED OR STATUTORY, INCLUDING WITHOUT LIMITATION ANY WARRANTY OF MERCHANTABILITY, ANY WARRANTY OF FITNESS FOR A PARTICULAR PURPOSE, AND ANY WARRANTIES ARISING FROM COURSE OF DEALING OR USAGE OF TRADE.

3. BUYER'S EXCLUSIVE REMEDY.

If the product fails to conform to the warranty set forth in paragraph 1 during the warranty period, and such nonconformity is not due to misuse, neglect, accident or improper maintenance, Buyer must notify Pierce within the time period specified in paragraph 1, and shall make the product available for inspection by Pierce or its designated agent. At the request of Pierce, any allegedly defective product shall be returned to Pierce by Buyer for examination and/or repair. Buyer shall be responsible for the cost of such transportation, and for risk of loss of or damage to the product during transportation. Within a reasonable time, Pierce shall repair or replace (at Pierce's option and expense) any nonconforming or defective parts. Repair or replacement shall be made only by a facility approved in advance in writing by Pierce. THIS REMEDY SHALL BE THE EXCLUSIVE AND SOLE REMEDY FOR ANY BREACH OF WARRANTY.

4. EXCLUSION OF CONSEQUENTIAL AND INCIDENTAL DAMAGES.

Notwithstanding anything to the contrary herein or in any agreement between Pierce and Buyer, IN NO EVENT SHALL PIERCE BE LIABLE FOR ANY CONSEQUENTIAL, INCIDENTAL, SPECIAL, INDIRECT, OR PUNITIVE DAMAGES WHATSOEVER, WHETHER ARISING OUT OF BREACH OF CONTRACT, WARRANTY, TORT (INCLUDING NEGLIGENCE AND STRICT LIABILITY) OR OTHER THEORY OF LAW OR EQUITY, WITH RESPECT TO VEHICLES OR OTHER PRODUCTS SOLD BY PIERCE, OR THEIR OPERATION OR FAILURE TO OPERATE, OR ANY DEFECTS THEREIN, OR ANY UNDERTAKINGS, ACTS OR OMISSIONS RELATED THERETO, REGARDLESS OF WHETHER PIERCE HAS BEEN INFORMED OF THE POSSIBILITY OF ANY SUCH DAMAGES. Without limiting the generality of the foregoing, Pierce specifically disclaims any liability for property or personal injury damages, penalties, damages for lost profits or revenues, loss of vehicles or products or any associated equipment, cost of substitute vehicles or products, down-time, delay damages, any other types of economic loss, or for any claims by any third party for any such damages.

Note: Any Surety Bond, if a part of the sale of the vehicle as to which this limited warranty is provided, applies only to this Pierce Basic One Year Limited Warranty for such vehicle, and not to other warranties made by Pierce in a separate document (if any) or to the warranties (if any) made by any manufacturer (other than Pierce) of any part, component, attachment or accessory that is incorporated into or attached to the vehicle.

CUMMINS-MERITOR COMMERCIAL VEHICLE SYSTEMS WARRANTY

COVERAGE FOR THE UNITED STATES AND CANADA MODEL YEAR 2024 VEHICLES

Cummins®

Meritor

WARRANTY INFORMATION TABLE OF CONTENTS

EFFECTIVE MODEL YEAR 2024 VEHICLES

Linehaul 3

General Service 6

Heavy Service/Specialty Vehicle 9

Fire and Emergency 12

Transit Bus 14

Off-highway Service 15

Terms and Conditions 17

How to Read Warranty Coverage

Number of Years	Mileage (in thousands) Unl = Unlimited	P = Parts Only P&L = Parts and Labor

Notice:
Models or components that are approved for use by Cummins-Meritor's vocational guidelines contained in Cummins-Meritor publication TP-9441 for axles, SP-8320 for trailer axles and TP-12126 for drivelines, or any other products that have an application approval completed with Cummins-Meritor which are not specifically listed, are warranted for one year, unlimited miles, parts only (1/Unl/P).

Products purchased on an incomplete vehicle (glider) are limited to one year, unlimited miles, parts only (1/Unl/P).

Advantage Program

Purchasing additional coverage on select components will continue to safeguard your investment against major repair costs after the initial base coverage expires. You can find out more about the Advantage Program by visiting **meritor.com** or by contacting Cummins-Meritor at **866-OnTrac1 (866-668-7221)**.

LINEHAUL WARRANTY INFORMATION

Vocational Definition of Linehaul

- Long distance hauling of food, goods and finished materials
- Not included are raw ferrous materials, minerals (except oil), sand, gravel, stone, rocks, topsoil, waste or logs
- Linehaul includes turnpike and hub & spoke

Linehaul Vehicles

- Auto Hauler[1]
- Bulk Hauler[1]
- Chip Hauler[1,2]
- Doubles
- Flatbed
- General Freight
- Grain Hauler[1]
- Livestock Hauler
- Moving Van
- Pipe Hauler
- Refrigerated Freight
- Tanker[1]
- Triples

[1] Cummins-Meritor classifies these vehicle types as high center of gravity, which require special axle housing considerations.
[2] Chip Hauler vehicles require specific axle models listed below and Linehaul condition to be eligible for Linehaul warranty consideration.

Linehaul Typically Is:

- High mileage operation (over 60,000 miles/year)
- Greater than 30 miles between starts and stops
- Maximum grades of 12%
- Well maintained highways of concrete or asphalt construction (100% on-road)
- Category A job sites, terminals, docks and transfer sites (defined as pavement, concrete or maintained and hard packed gravel). **Note:** Category B job sites, terminals, docks, transfer sites (defined as loose or unmaintained sand, dirt or gravel; landfill; farm field; mud; or other similar surfaces) are **NOT** approved for certain linehaul axle models.

Coverage under Cummins-Meritor's warranty require that the application of products be properly approved pursuant to OEM and Cummins-Meritor approvals. Refer to TP-9441 for axles, SP-8320 for trailer axles, TP-12126 for drivelines and/or contact Cummins-Meritor regarding specific application approval questions on any product line.

Front Non-Drive Steer Axles – 5/750/P&L

FD-965	MFS-10-144A-N	MFS-12-143A-N	MFS-13B-132B-N	MFS-14G-132B-N
FF-941	MFS-12-122A-N	MFS-12E-143A-N	MFS-13B-132C-N	MFS-14-132C-N
FF-942	MFS-12-122B-N	MFS-12-144A-N	MFS-14-122A-N	MFS-14F-132C-N
FF-943	MFS-12-122C-N	MFS-13-122A-N	MFS-14-122B-N	MFS-14G-132C-N
FF-944	MFS-12E-122A-N	MFS-13-122B-N	MFS-14F-122B-N	MFS-14-142B-N
FF-961	MFS-12E-122B-N	MFS-13-122C-N	MFS-14G-122B-N	MFS-14F-142B-N
FF-966	MFS-12E-122C-N	MFS-13-132B-N	MFS-14-122C-N	MFS-14G-142B-N
FF-967	MFS-12-124A-N	MFS-13-132C-N	MFS-14F-122C-N	MFS-14-142C-N
FG-941	MFS-12-132B-N	MFS-13-143A-N	MFS-14G-122C-N	MFS-14F-142C-N
FG-943	MFS-12-132C-N	MFS-13-144A-N	MFS-14-124A-N	MFS-14G-142C-N
MFS-10-122A	MFS-12E-132B-N	MFS-13B-122B-N	MFS-14-132B-N	MFS-14-143A-N
MFS-10-143A-N	MFS-12E-132C-N	MFS-13B-122C-N	MFS-14F-132B-N	MFS-14-144A-N

Rear Drive Single Axles – 5/750/P&L

MS-19-14X	MS-23-17H[1,2]	RS-23-160	RS-23-185
RS-21-160	MS-23-17X[2]	RS-23-161	RS-23-186

[1] Not approved for use in any Category B job sites, terminals, docks or transfer sites.
[2] Recommend 11 mm minimum wall thickness for these models used in combination with high center of gravity vehicles and trailing arm suspensions or vehicles operating mainly in Canada.

LINEHAUL WARRANTY INFORMATION

Rear Drive Tandem/Tridem Axles – 5/750/P&L

RT-40-160/P[1,2]	RZ-166[2]	MA-40-17H[3]	MT-34-14X/P[4]	MT-40-14X/P[4]
RT-46-160/P[1,2]	RT-50-160/P[1,2]	RZ-188	MT-40-14T/P	MT-40-14H/E[3,4]
RT-46-164/P[1,2]	MA-40-165	MA-40-175	MT-40-14X/P[4]	

[1] These models required for Chip Hauler and Linehaul warranty consideration.
[2] Each vehicle must have a Request for Application Recommendation (RAR) approved by Cummins-Meritor prior to vehicle build. All RARs must identify the chassis number or VIN. Refer to Product Information Letter #303 and #396 for further details.
[3] Not approved for use in any Category B job sites, terminals, docks or transfer sites.
[4] Recommend 11 mm minimum wall thickness for these models used in combination with high center of gravity vehicles and trailing arm suspensions or vehicles operating mainly in Canada.

Trailer Axles[1]

Beam and Brackets	5/500/P, 1/100/L
TPX3000 Axle Series[2]	10/Unl/P, 1/Unl/L
Wheel End Systems[3]	
Standard System[4]	1/100/P&L
AxlePak5	5/Unl/P&L
AxlePak7[5]	7/Unl/P&L

[1] For brake components and ABS coverage, refer to appropriate product warranties.
[2] Structural components only excluding spindle wear. Spindle wear is 5/Unl/P, 1/Unl/L.
[3] Includes hub, wheel seals and wheel bearings—all systems require annual inspections and proper documentation to ensure full coverage.
[4] When installed by Cummins-Meritor.
[5] When specified with AxlePak7 wheel end system, coverage on Meritor Tire Inflation System (MTIS) thru-tee and stator is 7/Unl/P, 1/Unl/L.

TAG/Pusher Axles[1]

TQ, TR Beam and Brackets	5/750/P&L

[1] For brake components and ABS coverage, refer to appropriate product warranties.

Trailer Mechanical Suspension Systems[1]

IMS40 (Integrated Mechanical Suspension – Tandem)[2]	1/Unl/P&L
IMS20 (Integrated Mechanical Suspension – Single)[2]	1/Unl/P&L

[1] For axle coverage, refer to appropriate product warranties.
[2] All other suspension components refer to appropriate manufacturer's warranty.

Trailer Air Suspension Systems

MPA40 (Tandem Axle Parallelogram)[1]	
Major Structural Components	5/500/P, 1/100/L
Curbing Damage Warranty[2]	5/500/P, 1/100/L
Height Control Valve	1/100/P&L
Shock Absorbers	2/200/P&L
Air Springs	2/200/P, 1/100/L
Bushings	5/Unl/P, 3/Unl/L
PinLoc Air Controls	1/100/P&L
PinLoc Actuator	3/300/P&L
MPA20 (Single Axle Parallelogram)	
Major Structural Components	5/500/P, 1/100/L
Height Control Valve	1/100/P&L
Shock Absorbers	2/200/P&L
Air Springs	2/200/P, 1/100/L
Bushings	5/Unl/P, 3/Unl/L
MTA and MTA-Tec6 Trailing Arm Suspension System	
Major Structural Components	5/500/P, 1/100/L
Height Control Valve	1/100/P&L
Air Springs	2/200/P, 1/100/L
Bushings	5/500/P, 3/300/L
Shock Absorbers	2/200/P&L
Lift Kit System	1/100/P&L

[1] Fastener torque coverage is limited to 2/Unl/P&L when torqued by Cummins-Meritor (For axle and ABS coverage, refer to appropriate product warranties.)
[2] "Curbing damage" is defined as deformation (bending, buckling or breakage), caused by sudden impact with a curb or similar fixed object. Damage to the RideSentry slider box (the suspension sliding sub-frame consisting of the frame rails, cross-members and central A-frame assembly), caused by accidental trailer impact with a curb or similar fixed object, is eligible for warranty coverage. Damage to other components or resulting from collision with another vehicle, rollover or fire is not covered under this provision. Warranty is not transferable to another trailer VIN and coverage does not apply if the trailer is deemed to be a total loss, scrapped or otherwise not salvageable.

LINEHAUL WARRANTY INFORMATION

Brake Components

Cam Q Series Trailer Brakes	5/500/P, 1/100/L
Q+ Drum Brake™[1]	5/500/P, 1/Unl/P&L
ASA	5/500/P, 1/Unl/P&L
Hubs/Cast Drums and Other Wheel-End Components	1/Unl/P
Hydraulic Disc Brakes	1/Unl/P
All Other Brakes	1/Unl/P
STEELite X30 Drum Brake™[2]	12-Years or Wearable Life/P
EX+ L and EX+LS Air Disc Brake™[3]	5/500/P, 1/Unl/L
EX+L Air Disc Brake Extended Standard Warranty[3,4]	5/500/P&L

[1] For Trailer only, 3/300/P against rust jacking when equipped with Platinum Shield III.
[2] Based on stamped wear diameter max.
[3] Warranty coverage for boots, seals, caps, bushings and pins is 2/200/P. Warranty coverage for pads is 1/100/P.
[4] Applies only to calipers using friction: MA9300 (EX225LXXXCGXXX).

Drivelines

RPL	5/500/P, 1/Unl/P&L
MXL	3/350/P, 1/Unl/P&L
92N	1/Unl/P

Meritor Tire Inflation System (MTIS)

MTIS Components	5/Unl/P, 1/Unl/L

GENERAL SERVICE WARRANTY INFORMATION

General Service Vehicles

- Auto Hauler
- Beverage Truck
- Bulk Hauler
- Chip Hauler
- Cross Country Coach
- Flatbed
- Front Engine Commercial Chassis
- Front Engine Integral Coach
- General Freight
- Grain Hauler
- Intercity Coach
- Intermodal Chassis
- Livestock Hauler
- Meat Packer
- Moving Van
- Municipal Truck
- Newspaper Delivery
- Pick-Up and Delivery
- Pipe Hauler
- Platform Auto Hauler
- Rear Engine Integral Coach
- Recreational Vehicles
- Refrigerated Freight
- School Bus
- Stake Truck
- Tanker
- Tanker Trailer
- Tour Bus
- Wrecker

General Service Typically Is:

- Typically, moderate mileage operation (less than 60,000 miles/year)
- An average of 3 to 30 miles between starts and stops
- Maximum grades of 12%
- Generally, on-road service (less than 10% off-road allowed)
- Category A job sites, terminals, docks and transfer sites (defined as pavement, concrete or maintained and hard packed gravel) or Category B job sites, terminals, docks and transfer sites (defined as loose or unmaintained sand, dirt or gravel; landfill; farm field; mud, or other similar surfaces)

Coverage under Cummins-Meritor's warranty require that the application of products be properly approved pursuant to OEM and Cummins-Meritor approvals. Refer to TP-9441 for axles, SP-8320 for trailer axles, TP-12126 for drivelines and/or contact Cummins-Meritor regarding specific application approval questions on any product line.

Front Non-Drive Steer Axles – 2/Unl/P&L

FD-965	MFS-7-113C-N	MFS-12-132C-N	MFS-14G-122B-N	MFS-16-122A-N
FF-941	MFS-7-153C-N	MFS-12E-132C-N	MFS-14-122C-N	MFS-16-133A-N
FF-942	MFS-7-163C-N	MFS-12-143A-N	MFS-14F-122C-N	MFS-16-135A-N
FF-943	MFS-8-113B-N	MFS-12-144A-N	MFS-14G-122C-N	MFS-16-143A-N
FF-944	MFS-8-143A-N	MFS-12E-143A-N	MFS-14-124A-N	MFS-18-133A-N
FF-946	MFS-8-153B-N	MFS-13-122A-N	MFS-14-132B-N	MFS-18-135A-N
FF-961	MFS-8-163B-N	MFS-13-122B-N	MFS-14F-132B-N	MFS-18-193A-N
FF-966	MFS-10-122A	MFS-13B-122B-N	MFS-14G-132B-N	MFS-20-133A-N
FF-967	MFS-10-143A-N	MFS-13-122C-N	MFS-14-132C-N	MFS-20-135A-N
FG-941	MFS-10-144A-N	MFS-13B-122C-N	MFS-14F-132C-N	MFS-20-192A-N
FH-941	MFS-12-122A-N	MFS-13-132B-N	MFS-14G-132C-N	MFS-20-193A-N
FH-946[1]	MFS-12E-122A-N	MFS-13-132C-N	MFS-14-142B-N	MFS-22-135A-N
FL-941	MFS-12-122B-N	MFS-13B-132B-N	MFS-14F-142B-N	MFS-22H-135A-N
FL-943	MFS-12E-122B-N	MFS-13B-132C-N	MFS-14G-142B-N	MFS-22-193A-N
MFS-6-151A-N	MFS-12-122C-N	MFS-13-143A-N	MFS-14-142C-N	MFS-22H-193A-N
MFS-6-153B-N	MFS-12E-122C-N	MFS-13-144A-N	MFS-14F-142C-N	
MFS-6-162B-N	MFS-12-124A-N	MFS-14-122A-N	MFS-14G-142C-N	
MFS-6-153C-N	MFS-12-132B-N	MFS-14-122B-N	MFS-14-143A-N	
MFS-6-162C-N	MFS-12E-132B-N	MFS-14F-122B-N	MFS-14-144A-N	

[1] Can also be used with reduced steer angles in tag position in Coach applications.

GENERAL SERVICE WARRANTY INFORMATION

Rear Drive Single Axles – 2/Unl/P&L

MS-17-13X	MS-21-14X	RC-23-162[1]	RS-23-186	MS-26-616-SP
MS-17-14X	MS-23-17X	RC-23-165[1]	RS-24-160	RS-30-185
MS-19-13X	RS-21-160	RS-23-160	RC-25-160	MS-30-616
MS-19-14X	RC-23-160	RS-23-161	RS-26-185	MS-30-616-SP
MS-21-13X	RC-23-161	RS-23-185	MS-26-616	RS-35-380

[1] 3/Unl/P&L if PreSet by Cummins-Meritor.

Rear Drive Tandem/Tridem Axles – 2/Unl/P&L

MT-34-14X/P	MT-44-14X/P	RT-52-185[1]	MT-70-380
MT-40-14T/P	RT-46-169	MT-58-616	RZ-188
MT-40-14X/P	MT-52-616	RT-58-185[1]	

[1] Each vehicle must have a Request for Application Recommendation (RAR) approved by Cummins-Meritor prior to vehicle build. All RARs must identify the chassis number or VIN. Refer to Product Information Letter #303 and #396 for further details.

Rear Drive Tandem/Tridem – 3/Unl/P&L

RT-40-160/P	RT-46-160/P	RT-46-164/P	RT-50-160/P	RZ-166

Rear Drive Axles – 1/Unl/P&L

RND-14H	RND-16A

Brake Components

Cam Q Series Trailer Brakes[1]	3/Unl/P, 1/Unl/L
Cam P[2]	2/200/P
Cam	3/Unl/P
Q+ Drum Brake™	3/Unl/P&L
Q+ Drum Brake™[1,2]	2/200/P&L
ASA	3/Unl/P
ASA[2]	2/200/P
Hubs/Cast Drums and Other Wheel-End Components	1/Unl/P
Hydraulic Disc Brakes	1/Unl/P
All Other Brakes	1/Unl/P
STEELite X30 Drum Brake™[3]	12-Years or Wearable Life/P
EX+ Air Disc Brake™[4]	2/Unl/P&L

[1] For Trailer only, 3/300/P against rust jacking when equipped with Platinum Shield III or Chassis Protect.
[2] Applies to Tour Bus and Cross Country Coach only.
[3] Based on stamped wear diameter max.
[4] Warranty coverage for boots, seals, caps, bushings and pins is 2/200/P. Warranty coverage for pads is 1/100/P.

Drivelines

RPL	4/400/P, 1/Unl/P&L
MXL	3/350/P, 1/Unl/P&L
92N	1/Unl/P

PTO – 1/Unl/P&L

MPT-170	MPT-185	MPT-500	MPT-1702
MPT-180	MPT-309	MPT-518	

GENERAL SERVICE WARRANTY INFORMATION

Trailer Axles[1]

Beam and Brackets[2]	5/Unl/P, 1/Unl/L
TPX4000 Axle Series[3]	10/Unl/P, 1/Unl/L
Wheel End Systems[4]	
Standard System[5]	1/Unl/P&L
AxlePak5	5/Unl/P&L
AxlePak7[6]	7/Unl/P&L
AxlePak10[7]	10/Unl/P&L

[1] For brake components and ABS coverage, refer to appropriate product warranties.
[2] 9000 Series is 3/Unl/P, 1/Unl/L
[3] Structural components only excluding spindle wear. Spindle wear 5/Unl/P, 1/Unl/L.
[4] Includes hub, wheel seals and wheel bearings—all systems require annual inspections and proper documentation to ensure full coverage.
[5] When installed by Cummins-Meritor.
[6] When specified with AxlePak7 wheel end system, coverage on Meritor Tire Inflation System (MTIS) thru-tee and stator is 7/Unl/P, 1/Unl/L.
[7] AxlePak10 is limited to Intermodal Chassis applications equipped with TPX4000 series axles.

TAG/Pusher Axles[1]

TQ, TR Beam and Brackets	3/Unl/P, 1/Unl/L
MC14002, MC16003, FH946[2]	2/Unl/P&L

[1] For brake components coverage, refer to appropriate product warranties.
[2] 3/Unl/P&L if sold with PreSet by Cummins-Meritor.

Meritor Tire Inflation System (MTIS)

MTIS Components	5/Unl/P, 1/Unl/L

Trailer Mechanical Suspension Systems[1]

IMS40 (Integrated Mechanical Suspension – Tandem)[2]	1/Unl/P&L
IMS20 (Integrated Mechanical Suspension – Single)[2]	1/Unl/P&L

[1] For axle coverage, refer to appropriate product warranties.
[2] All other suspension components refer to appropriate manufacturer's warranty.

Trailer Air Suspension Systems[1]

MPA40 (Tandem Axle Parallelogram)[2]	
Major Structural Components	5/Unl/P, 1/Unl/L
Curbing Damage Warranty[3]	5/500/P, 1/100/L
Height Control Valve	1/Unl/P&L
Shock Absorbers	2/Unl/P&L
Air Springs	2/Unl/P, 1/Unl/L
Bushings	5/P, 3/L
PinLoc Air Controls	1/Unl/P&L
PinLoc Actuator	3/Unl/P&L
MPA20 (Single Axle Parallelogram)	
Major Structural Components	5/Unl/P, 1/Unl/L
Height Control Valve	1/Unl/P&L
Shock Absorbers	2/Unl/P&L
Air Springs and Rebound Straps	2/Unl/P, 1/Unl/L
Bushings	5/P, 3/L
MTA and MTA-Tec6 Trailing Arm Suspension System	
Major Structural Components	5/Unl/P, 1/Unl/L
Height Control Valve	1/Unl/P&L
Air Springs	2/Unl/P, 1/Unl/L
Bushings[4]	5/Unl/P, 3/Unl/L
Shock Absorbers	2/Unl/P&L
Lift Kit System	1/Unl/P&L

[1] For axle coverage, refer to appropriate product warranties.
[2] Fastener torque coverage is limited to 2/Unl/P&L when torqued by Cummins-Meritor.
[3] "Curbing damage" is defined as deformation (bending, buckling or breakage), caused by sudden impact with a curb or similar fixed object. Damage to the RideSentry slider box (the suspension sliding sub-frame, consisting of the frame rails, cross-members and central A-frame assembly), caused by accidental trailer impact with a curb or similar fixed object, is eligible for warranty coverage. Damage to other components or damage resulting from collision with another vehicle, rollover or fire is not covered under this provision. Warranty is not transferable to another trailer VIN and coverage does not apply if the trailer is deemed to be a total loss, scrapped or otherwise not salvageable.
[4] Raw wood applications 3/Unl/P, 1/Unl/L

HEAVY SERVICE/SPECIALTY VEHICLE WARRANTY INFORMATION

Heavy Service/Specialty Vehicles

- Airport Rescue Fire Fighting (ARFF)
- Airport Shuttle[1]
- Asphalt Truck
- Block Truck
- Bottom Dump Trailer Combination
- Cementing Vehicle
- Commercial Pick-Up
- Concrete Pumper
- Construction Material Hauler
- Mixer
- Demolition
- Drill Rig
- Dump
- Equipment Hauling
- Flatbed Trailer Hauler
- Flatbed Truck
- Fracturing Truck
- Front Loader
- Geophysical Exploration
- Hopper Trailer Combinations
- Landscaping Truck
- Liquid Waste Hauler
- Log Hauling
- Lowboy
- Michigan Special Gravel Train
- Michigan Special Log Hauler
- Michigan Special Steel Hauler
- Michigan Special Waste Vehicle
- Municipal Dump
- Rear Loader (Refuse)
- Recycling Truck
- Residential Pick-Up (Refuse)
- Rigging Truck
- Roll-Off
- Scrap Truck
- Semi-End Dump
- Sewer/Septic Vacuum
- Shuttle Bus[1]
- Side Loader
- Snowplow/Snowblower
- Steel Hauling
- Tanker
- Tank Truck
- Tractors with Pole Trailers
- Tractor/Trailer with Jeeps
- Transfer Dump
- Transfer Vehicle
- Utility Truck
- Winch Truck

[1] Commercial chassis only

Heavy Service/Specialty Vehicle Typically Is:

- Moderate mileage operation (less than 60,000 miles per year)
- On/off-road vocations (10% or more off-road)
- Moderate to frequent stops/starts (up to 10 stops per mile)
- An average of three (3) miles between starting and stopping

Coverage under Cummins-Meritor's warranty require that the application of products be properly approved pursuant to OEM and Cummins-Meritor approvals. Refer to TP-9441 for axles, SP-8320 for trailer axles, TP-12126 for drivelines and/or contact Cummins-Meritor regarding specific application approval questions on any product line.

Front Non-Drive Steer Axles – 2/Unl/P&L

FD-965
FF-941
FF-942
FF-943
FF-944
FF-946
FF-961
FF-966
FF-967
FG-941
FG-943
FH-941
FH-946
FL-941
FL-943
MFS-6-151A-N
MFS-6-153B
MFS-6-162B
MFS-6-162C
MFS-7-113C-N
MFS-7-153C-N
MFS-7-163C-N
MFS-8-113B-N
MFS-8-153B-N
MFS-8-163B-N
MFS-10-122A
MFS-10-143A-N
MFS-10-144A-N
MFS-12-122
MFS-12E-122
MFS-12-122B-N
MFS-12E-122B-N
MFS-12-122C-N
MFS-12E-122C-N
MFS-12-124A-N
MFS-12-132B-N
MFS-12E-132B-N
MFS-12-132C-N
MFS-12E-132C-N
MFS-12-143A-N
MFS-12-144A-N
MFS-12-155
MFS-13-122
MFS-13-122B-N
MFS-13B-122B-N
MFS-13-122C-N
MFS-13B-122C-N
MFS-13-132B-N
MFS-13B-132B-N
MFS-13-132C-N
MFS-13B-132C-N
MFS-13-143A-N
MFS-13-144A-N
MFS-13-155
MFS-14-122
MFS-14-122B-N
MFS-14F-122B-N
MFS-14G-122B-N
MFS-14-122C-N
MFS-14F-122C-N
MFS-14G-122C-N
MFS-14-124A-N
MFS-14-132B-N
MFS-14F-132B-N
MFS-14G-132B-N
MFS-14-132C-N
MFS-14F-132C-N
MFS-14G-132C-N
MFS-14-142B-N
MFS-14F-142B-N
MFS-14G-142B-N
MFS-14-142C-N
MFS-14F-142C-N
MFS-14G-142C-N
MFS-14-143A-N
MFS-14-144A-N
MFS-16-122A-N
MFS-16-133A-N
MFS-16-135A-N
MFS-16-143A-N
MFS-18-133A-N
MFS-18-135A-N
MFS-18-192A-N
MFS-18-193A-N
MFS-20-133A-N
MFS-20-135A-N
MFS-20-192A-N
MFS-20-193A-N
MFS-22-135A-N
MFS-22H-135A-N
MFS-22-193A-N
MFS-22H-193A-N
RF-16-145
RF-21-160

HEAVY SERVICE/SPECIALTY VEHICLE WARRANTY INFORMATION

Front Drive Steer Axles – 2/Unl/P&L

MX-10-120	MX-12-120 EVO	MX-16-120	MX-19-140	MX-23-160
MX-10-120 EVO	MX-14-120	MX-18-120	MX-21-140	MX-23-810
MX-12-120	MX-14-120 EVO	MX-17-140	MX-21-160	

Front Drive Steer Axles – 1/Unl/P&L

MX-08-130-FV (FSD-08A)	MX-14-130-FV (FSD-14A)	MX-20-130-FV (FSD-20A)	MX-23-130-SD (SDA-2300)
MX-10-130-FV (FSD-10A)	MX-16-130-FV (FSD-16A)	MX-21-130-FV (FSD-21A)	
MX-12-130-FV (FSD-12A)	MX-18-130-FV (FSD-18A)	MX-21-130-SD (SDA-2100)	
MX-13-130-FV (FSD-13A)	MX-18-130-SD (SDA-1800)	MX-23-130-FV (FSD-23A)	

Rear Drive Axles – 2/Unl/P&L

MS-17-14X	RH-23-160	RS-23-186/380	MS-26-616-SP	RS-30-185/380
MS-19-14X	RS-23-160	RS-24-160	RS-26-185/380	MS-35-380
MS-21-14X	RC-23-161	RC-25-160	RC-26-633	RS-38-380
RS-21-160	RS-23-161	RS-25-160	MS-30-616	MT-58-616
RC-23-160	RS-23-185	MS-26-616	MS-30-616-SP	MT-58-616-SP

Rear Drive Axles – 1/Unl/P&L

RND-14H	RND-16A

Rear Drive Tandem/Tridem Axles – 2/Unl/P&L

MT-34-14X/P	MT-44-14X/P	MT-52-616	MT-58-616	RT-70-380
MT-40-14T/P	RT-46-169	MT-52-616-SP	MT-58-616-SP	MT-70-380
MT-40-14X/P	RT-58-160	RT-52-185/380[1,2]	RT-58-185/380[1,2]	RZ-188

[1] Axle model designated will vary according to options and variations specified on these axles. Contact Cummins-Meritor Axle Applications Engineering for details.
[2] Each vehicle must have a Request for Application Recommendation (RAR) approved by Cummins-Meritor prior to vehicle build. All RARs must identify the chassis number or VIN. Refer to Product Information Letter #303 and #396 for further details.

Rear Drive Tandem/Tridem – 3/Unl/P&L

RT-40-160/P/A[3]	RT-46-160/P/A[1,3]	RT-46-164/P[2,3]	RT-50-160/P/A[3]	RZ-166

[1] U.S. only. Canadian warranty = 1/Unl/P for combination vehicles only.
[2] Axle model designated will vary according to options and variations specified on these axles. Contact Cummins-Meritor Axle Applications Engineering for details.
[3] Each vehicle must have a Request for Application Recommendation (RAR) approved by Cummins-Meritor prior to vehicle build. All RARs must identify the chassis number or VIN. Refer to Product Information Letter #303 and #396 for further details.

PTO – 1/Unl/P&L

MPT-170	MPT-185	MPT-500	MPT-1702
MPT-180	MPT-309	MPT-518	

HEAVY SERVICE/SPECIALTY VEHICLE WARRANTY INFORMATION

Drivelines

RPL	3/Unl/P, 1/Unl/P&L
92N	1/Unl/P&L
MXL	1/Unl/P&L

Transmission – 1/Unl/P&L

FAT 30

Brake Components

Cam P	3/Unl/P
Cam P	2/100/P
Cam Cast Plus™	2/100/P&L
Q+ Drum Brake™[1]	3/Unl/P&L
Q+ Drum Brake™[2]	2/100/P&L
ASA	3/Unl/P
ASA[2]	2/100/P
Hubs/Cast Drums and Other Wheel-End Components[3]	1/Unl/P
Hydraulic Disc Brakes	1/Unl/P
All Other Brakes	1/Unl/P
EX+ Air Disc Brake[4]	2/100/P&L

[1] For Trailer only, 3/300/P against rust jacking when equipped with Platinum Shield III.
[2] Applies to City Bus, Trolley, Shuttle Bus and Airport Shuttle only.
[3] Based on stamped wear diameter max.
[4] Warranty coverage for boots, seals, caps, bushings and pins is 2/100/P. Warranty coverage for pads is 1/100/P.

Trailer Axles[1]

Beam and Brackets[2]	5/Unl/P, 1/Unl/L
Wheel End Systems[3]	
Standard System[4]	1/Unl/P&L

[1] For brake components coverage, refer to appropriate product warranties.
[2] 9000 Series is 3/Unl/P, 1/Unl/L
[3] Includes hub, wheel seals and wheel bearings—all systems require annual inspections and proper documentation to ensure full coverage.
[4] When installed by Cummins-Meritor.

Trailer Air Suspension Systems[1]

MTA and MTA-Tec6 Trailing Arm Suspension System	
Major Structural Components[2]	5/500/P, 1/100/L
Height Control Valve	1/100/P&L
Air Springs	2/200/P, 1/100/L
Bushings[2]	5/500/P, 3/300/L
Shock Absorbers	2/200/P&L
Lift Kit System	1/100/P&L

[1] For axle coverage, refer to appropriate product warranties.
[2] Raw wood applications 3/Unl/P, 1/Unl/L

Meritor Tire Inflation System (MTIS)

MTIS Components	5/Unl/P, 1/Unl/L

Gearboxes – 1/Unl/P&L

MGX-402	MGX-450	MGX-466	MGX-538
MGX-423	MGX-451	MGX-479	

Transfer Cases – 1/Unl/P

MTC-2212-CV (306)	MTC-3124 (T-2119)	MTC-3312-FV (TC-270)
MTC-3106-FV (TC-137)	MTC-3203	MTC-3220-FC (TC-142)
MTC-3111 (T-2111)	MTC-3205-GV (MTC-25/RTC-25)	MTC-4206-FV (TC-38)
MTC-3112-CV (548C)	MTC-3206-FV (TC-237)	MTC-4208
MTC-3116 (T-2111 through-shaft)	MTC-3206-CS (544)	MTC-4210
MTC-3118-FV (TC-180 and TC-180-23)	MTC-3208-GV (RTC-50)	MTC-4213
MTC-3118-CV (358)	MTC-3209-GV (MTC-60/RTC-60)	
MTC-3120-FV (TC-143)	MTC-3212-CV (315 and 548B)	

FIRE AND EMERGENCY WARRANTY INFORMATION

Fire and Emergency Vehicles

- Aerial Ladder Truck
- Aerial Platform
- Ambulance
- Command Vehicle
- Crash Fire Rescue
- Pumper
- Rapid Intervention Vehicle (RIV)
- Tanker

Fire and Emergency Typically Is:

- Lower mileage operations (less than 20,000 miles/year)
- Generally, on-road service (less than 10% off-road)
- An average of three (3) miles between starting and stopping

Coverage under Cummins-Meritor's warranty require that the application of products be properly approved pursuant to OEM and Cummins-Meritor approvals. Refer to TP-9441 for axles, TP-12126 for drivelines and/or contact Cummins-Meritor regarding specific application approval questions on any product line.

Front Non-Drive Steer Axles – 5/Unl/P&L

FL-941	MFS-18-135A-N	MFS-20-135A-N	MFS-22H-135A-N
FL-943	MFS-18-193A-N	MFS-20-193A-N	MFS-22-193A-N
MFS-18-133A-N	MFS-20-133A-N	MFS-22-135A-N	MFS-22H-193A-N

Front Drive Steer Axles – 2/Unl/P&L

MX-19-140	MX-21-140	MX-21-160	MX-23-160	MX-23-810

Rear Drive Single Axles – 5/Unl/P&L

RC-23-160	RS-23-185	RC-25-160	RS-35-185[1]
RS-23-160	RS-23-186	RS-26-185	RS-25-160
RS-23-161	RS-24-160	RS-30-185	

[1] 2/Unl/P&L if PreSet by Cummins-Meritor.

Rear Drive Tandem/Tridem Axles – 5/Unl/P&L

MT-40-14X/P	RT-46-160/P	RT-50-160/P	MT-58-616
RT-40-160/P	RT-46-164/P	MT-52-616	RT-58-185[1]
MT-44-14X/P	RT-46-169	RT-52-185[1]	MT-70-380[2]

[1] Each vehicle must have a Request for Application Recommendation (RAR) approved by Cummins-Meritor prior to vehicle build. All RARs must identify the chassis number or VIN. Refer to Product Information Letter #303 and #396 for further details.
[2] 2/Unl/P&L

Transfer Cases – 1/Unl/P

MTC-2212-CV (306)	MTC-3124 (T-2119)	MTC-3220-FC (TC-142)
MTC-3106-FV (TC-137)	MTC-3206-FV (TC-237)	MTC-4206-FV (TC-38)
MTC-3111 (T-2111 through-shaft)	MTC-3206-CS (544)	MTC-4208
MTC-3112-CV (548C)	MTC-3208-GV (RTC-50)	MTC-4210
MTC-3118-FV (TC-180 and TC-180-23)	MTC-3209-GV (MTC-60/RTC-60)	MTC-4213
MTC-3118-CV (358)	MTC-3212-CV (315 and 548B)	
MTC-3120-FV (TC-143)	MTC-3312-FV (TC-270)	

FIRE AND EMERGENCY WARRANTY INFORMATION

Brake Components

Cam	3/Unl/P
Q+ Drum Brake™	3/Unl/P&L
ASA	3/Unl/P
Hubs/Cast Drums and Other Wheel-End Components	1/Unl/P
Hydraulic Disc Brakes	1/Unl/P
All Other Brakes	1/Unl/P
EX+ Air Disc Brake™[1]	2/Unl/P&L

[1] Warranty coverage for boots, seals, caps, bushings and pins is 2/200/P.
Warranty coverage for pads is 1/100/P.

Drivelines

RPL	4/400/P, 1/Unl/L
MXL	3/350/P, 1/Unl/L
92N	1/Unl/P

PTO – 1/Unl/P&L

MPT-170	MPT-185	MPT-500	MPT-1702
MPT-180	MPT-309	MPT-518	

TRANSIT BUS WARRANTY INFORMATION

Transit Bus Vehicles

- Airport Shuttle
- City Bus
- Commuter Coach
- Shuttle Bus
- Transit Bus
- Trolley

Transit Bus Typically Is:

- Moderate mileage operation (less than 50,000 miles per year)
- Moderate to frequent stops/starts (up to 10 stops per mile)

Coverage under Cummins-Meritor's warranty require that the application of products be properly approved pursuant to OEM and Cummins-Meritor approvals. Refer to TP-9441 for axles, TP-12126 for drivelines and/or contact Cummins-Meritor regarding specific application approval questions on any product line.

Front Non-Drive Steer Axles – 5/300/P&L

FH-946	FH-941[1]	MFS-12-155	MFS-13-155

[1] Commuter coach only – 2/Unl/P&L

Rear Drive Single Axles – 5/300/P&L

RS-23-160	71163	RC-23-162[1]	RS-21-160
RC-23-161	79163	RC-23-165[1]	

[1] Commuter coach only – 2/Unl/P&L

Tag Axles – 2/Unl/P&L

MC-14002	MC-16003	FH-946

Center Non-drive Axles – 5/300/P&L

MC-26000	71063	79063

Gearboxes – 1/Unl/P&L

MGX-450	MGX-451	MGX-538

Brake Components

Cam Cast Plus™	2/100/P&L
Q+ Drum Brake™[1]	2/100/P&L
ASA[1]	2/100/P
Hubs/Cast Drums and Other Wheel-End Components	1/Unl/P
All Other Brakes	1/Unl/P
EX+ Air Disc Brake[2]	2/100/P&L

[1] Applies to City Bus, Trolley, Shuttle Bus and Airport Shuttle only.
[2] Warranty coverage for boots, seals, caps, bushings and pins is 2/100/P. Warranty coverage for pads is 1/100/P.

Drivelines

RPL	3/Unl/P, 1/Unl/L
92N	1/Unl/P&L
MXL	1/Unl/P&L

OFF-HIGHWAY SERVICE WARRANTY INFORMATION

Industrial and Off-Highway Service Vehicles

- Load-On/Load-Off
- Port Tractor
- Rail Yard Spotter
- Roll-On/Roll-Off
- Stevedoring Tractor
- Trailer Spotter
- Yard Jockey
- All and Rough Terrain Cranes
- Forestry
- Material Handling
- Specialized Heavy Haul
- Excavator
- Compactor
- Fertilizer Spreader
- Snow Blower
- Mining and Specialized Mining
- Rail Car Mover
- Loader
- Tow Tractor
- Pushback Tractor

Industrial and Off-Highway Service Typically Is:

- Low mileage operation
- Low speed vehicle speed restriction
- Vehicles are not typically licensed for highway use
- Six (6) starts/stops per mile (typical)

Coverage under Cummins-Meritor's warranty require that the application of products be properly approved pursuant to OEM and Cummins-Meritor approvals. Contact Cummins-Meritor regarding specific application approval questions on any product line.

Front Non-Drive Steer Axles – 1/Unl/P

FF - 941	FG - 941	FN - 951	MFS-20-192A-N	MFS-22-193A-N
FF - 943	FG - 943	FS-25	MFS-20-193A-N	MFS-22H-193A-N
FF - 961	FL - 941	MFS-20-133A-N	MFS-22-135A-N	MON-Z0 FAMILY
FF - 966	FL - 943	MFS-20-135A-N	MFS-22H-135A-N	

Rear Drive Axles – 1/Unl/P

MT-14X[1]	RS-23-380	RS-30-185	RT-145[1]
RS-23-186	RS-24-160	RS-30-380	RT-160[1]

[1] 2/Unl/P for LO/LO Terminal Tractor applications

Planetary Axles – 1/Unl/P

MOB	MOE	MOH	MOT	MOZ
MOC	MOF	MOR	MOX	
MOD	MOG	MOS	MOY	

Gearboxes – 1/Unl/P&L

MGX-402	MGX-450	MGX-466	MGX-538
MGX-423	MGX-451	MGX-479	

PTO – 1/Unl/P&L

MPT-170	MPT-185	MPT-500	MPT-1702
MPT-180	MPT-309	MPT-518	

OFF-HIGHWAY SERVICE WARRANTY INFORMATION

Transfer Cases – 1/Unl/P

MTC-2212-CV (306)
MTC-3106-FV (TC-137)
MTC-3111 (T-2111 through-shaft)
MTC-3112-CV (548C)
MTC-3116 (T-2111)
MTC-3118-FV (TC-180 and TC-180-23)
MTC-3118-CV (358)
MTC-3120-FV (TC-143)
MTC-3124 (T-2119)
MTC-3206-FV (TC-237)
MTC-3208-GV (RTC-50)
MTC-3209-GV (MTC-60/RTC-60)
MTC-3220-FC (TC-142)

Drivelines – 1/Unl/P

RPL
MXL

Transmission – 1/Unl/P&L

FAT 30

Brake Components

Cam	3/Unl/P
Q+ Drum Brake™	3/Unl/P&L
ASA	3/Unl/P
Hubs/Cast Drums and Other Wheel-End Components	1/Unl/P
Hydraulic Disc Brakes	1/Unl/P
All Other Brakes	1/Unl/P

TERMS AND CONDITIONS

Coverage Exclusions

Product Description

All
The cost of any repairs, replacements or adjustments to a covered component (1) associated with noise; (2) resulting from the use or installation of non-genuine Cummins-Meritor components or materials; (3) due to vibration associated with improper operation or misapplication of drivetrain components; and (4) damage resulting from corrosion.

For axle assemblies supplied by Cummins-Meritor with suspension and interface brackets designed and/or attached by non-Cummins-Meritor parties, Cummins-Meritor warranty coverage does not apply to the brackets, bracket attachment methods and field issues caused by brackets or bracket attachments to any covered component unless specified in a separate OEM agreement.

Front Axles[1]
Linehaul – King Pin Bushings 1yr/Unl P&L
All Other Vocations – King Pin Bushings Excluded

[1] King Pin Bushing wear excluded for all vocations.

Rear Axles
Self-contained traction equalizers and oil filters. The use of NoSPIN differentials will result in the exclusion of axle shafts from warranty considerations. NoSPIN is a product of Eaton.

ASA
Boot and bushing. Bent, broken, over-torqued, missing or otherwise damaged pawl assemblies.

Cam Brake
Brake lining wear and brake shoe "rust-jacking."

Disc Brake
Pad wear, rotor wear.

Coverage Limitations

Product Description

All
Any claim beyond 60 days from date of repair will not be accepted or honored under this warranty program. Products purchased on an incomplete vehicle (glider) are limited to one year, unlimited miles parts only (1/Unl/P).

Warranty coverage on vehicles with 1,850 lb-ft engine torque and over may be reduced on individual drivetrain components. Contact your Cummins-Meritor representative for specific details.

Front Axles
Tie rod and tie rod ends limited to 3-year/300,000-mile or published vocational coverage, whichever is less. Wheel seals, gaskets and wheel bearings are covered for 1 year/unlimited miles if the wheel end equipment is supplied and assembled by Cummins-Meritor.

Rear Axles
Pinion and through shaft seals limited to 3-year/300,000-mile or published vocational coverage, whichever is less, if yoke is installed by Cummins-Meritor. If yoke is not installed by Cummins-Meritor, then Cummins-Meritor does not warrant pinion seals. Wheel seals, gaskets and wheel bearings are covered for 1 year/unlimited miles if the wheel end equipment is supplied and assembled by Cummins-Meritor.

Rear Axles
The Cummins-Meritor breather part number A-2297-C-8765 with A-3196-J-1336 hose must be used for eligibility of any potential warranty consideration relating to contamination and/or loss of lube in axles.

Cam Brake
Limited to bracket, brake spider and camshaft structural integrity.

STEELite X30
Wearable life is up to the discard diameter of the drum.

Terms and Conditions

(1) What is Covered by this Commercial Warranty?

Meritor Heavy Vehicle Systems, LLC warrants to the owner ("Owner") that the components listed in this publication, which have been installed by an Original Equipment Manufacturer ("OEM") as original equipment in vehicles licensed for on-highway use, will be free from defects in material and workmanship. This warranty coverage begins only after the expiration of the OEM's vehicle warranty for the applicable covered components. Warranty coverage ends at the expiration of the applicable time period from the date of vehicle purchase by the first Owner or the applicable mileage limitation, whichever occurs first. Duration of coverage varies by component and vocation as detailed elsewhere in this warranty statement.

Some components are warranted for parts only and the Owner must pay any labor costs associated with the repair or replacement of the component. Other components are warranted for both parts and reasonable labor to repair or replace the subject component. Components (whether new, used or remanufactured) installed as replacements under this warranty are warranted only for the remainder of the original period of time or mileage under the original warranty.

For certain components, coverage requires the use of specific extended drain interval or synthetic lubricants. For further information about lubrication and maintenance, see Cummins-Meritor publication Maintenance Manual Number I and the applicable Cummins-Meritor maintenance manual for the product in question. Other conditions and limitations applicable to this warranty are detailed below.

TERMS AND CONDITIONS

(2) Designation of Vocational Use Required

To obtain warranty coverage, each Owner must notify Cummins-Meritor through the OEM new truck and/or trailer dealer of the intended vocational use of the vehicle into which the Cummins-Meritor components have been incorporated prior to the vehicle in-service date. This notification may be accomplished by registering the vehicle through your OEM new truck and/or trailer dealer or with Cummins-Meritor directly. Failure to notify Cummins-Meritor of (I) the intended vocational use of the vehicle or (II) a change in vocational use from that which was originally designated, will result in the application of a one year, unlimited mileage, parts only warranty (1/Unl/P) from the initial in-service date.

A second Owner and each subsequent Owner must also notify Cummins-Meritor as to the intended vocational use of the vehicle. This notification can be sent directly to Cummins-Meritor or through the OEM new truck and/or trailer dealer. The duration and mileage coverage of this warranty cannot exceed the coverage extended to the first Owner after his or her initial designation of vocational use.

Coverage under Cummins-Meritor's warranty requires that the application of products be properly approved pursuant to OEM and Cummins-Meritor approvals. Refer to TP-9441 for axles, SP-8320 for trailer axles, TP-12126 for drivelines and/or contact Cummins-Meritor regarding specific application approval questions on any product line.

(3) What is the Cost of this Warranty?

There is no charge to the Owner for this warranty.

(4) What is not Covered by this Warranty?

This warranty does not cover normal wear and tear; nor does it cover a component that fails, malfunctions or is damaged as a result of (I) improper installation, adjustment, repair or modification (including the use of unauthorized attachments or changes or modification in the vehicle's configuration, usage or vocation from that which was originally approved by Cummins-Meritor), (II) accident, natural disaster, abuse or improper use (including loading beyond the specified maximum vehicle weight or altering engine power settings to exceed the axle and/or driveline capacity) or (III) improper or insufficient maintenance (including deviation from approved lubricants, change intervals or lube levels). This warranty does not cover any component or part that is not branded by Cummins-Meritor. **For vehicles that operate full or part time outside of the United States and Canada, a one year, unlimited mileage, parts only warranty (1/Unl/P) will apply.**

(5) Remedy

The exclusive remedy under this warranty shall be the repair or replacement of the defective component at Cummins-Meritor's option. Cummins-Meritor reserves the right to require that all applicable failed materials are available and/or returned to Cummins-Meritor for review and evaluation.

(6) Disclaimer of Warranty

THIS WARRANTY IS EXPRESSLY IN LIEU OF ALL OTHER WARRANTIES OR CONDITIONS, EXPRESSED, IMPLIED OR STATUTORY INCLUDING ANY IMPLIED WARRANTY OF MERCHANTABILITY OR FITNESS FOR PARTICULAR PURPOSE.

(7) Limitation of Remedies

In no event shall Cummins-Meritor be liable for special, incidental, indirect or consequential damages of any kind or under any legal theory, including, but not limited to, towing, downtime, lost productivity, cargo damage, taxes or any other losses or costs resulting from a defective covered component.

(8) To Obtain Service

If the Owner discovers within the applicable coverage period a defect in material or workmanship, the Owner must promptly give notice to either Cummins-Meritor or the dealer from which the vehicle was purchased. To obtain service, the vehicle must be taken to any participating OEM new truck and/or trailer dealer or authorized Cummins-Meritor service location. The dealer will inspect the vehicle and contact Cummins-Meritor for an evaluation of the claim. When authorized by Cummins-Meritor, the dealer will repair or replace during the term of this warranty any defective Cummins-Meritor component covered by this warranty.

(9) Entire Agreement

This is the entire agreement between Cummins-Meritor and the Owner about warranty and no Cummins-Meritor employee or dealer is authorized to make any additional warranty on behalf of Cummins-Meritor. This agreement allocates the responsibilities for component failure between Cummins-Meritor and the Owner.

Cummins Inc.
Box 3005
Columbus, IN 47202-3005
U.S.A.

cummins.com

Product models, brands, names and trademarks depicted herein are the property of their respective owners and, except where otherwise indicated, are not in any way associated with Meritor Heavy Vehicle Systems, LLC, or any parent or affiliate, thereof.

SP-95155
Bulletin 6451105 Produced in U.S.A. Rev. 1/24
©2024 Meritor, Inc.

Fire and Rescue Apparatus

Three (3) Year Material and Workmanship
Meritor Wabco ABS Brake System

Limited Warranty

1. LIMITED WARRANTY

Subject to the limitations and exclusions set forth below, Pierce Manufacturing provides the following warranty to the Buyer:

Coverage:	**The Meritor Wabco ABS brake system shall be covered by Meritor Wabco as indicated in the attached Meritor Wabco warranty coverage description**
Warranty Begins:	**The date of the original purchase invoice (issued when the product ships from the factory).**
Warranty Period Ends After:	**Three (3) Year**
Conditions and Exclusions: **See Also Paragraphs 2 thru 4**	**The exclusions listed in the attached Meritor Wabco warranty description shall apply.**

This limited warranty shall apply only if the product is properly maintained in accordance with Pierce's maintenance instructions and manuals and is used in service which is normal to the particular model. Normal service means service which does not subject the product to stresses or impacts greater than normally result from careful use. If the Buyer discovers a defect or nonconformity, it must notify Pierce in writing within thirty (30) days after the date of discovery, but in any event prior to the expiration of the warranty period. THIS LIMITED WARRANTY MAY NOT BE ASSIGNED OR OTHERWISE TRANSFERRED BY THE BUYER TO ANY SUBSEQUENT USER OR PURCHASER OR TO ANY OTHER PERSON OR ENTITY.

Notwithstanding anything to the contrary herein, Pierce makes no warranty whatsoever as to:

(a) any integral parts, components, attachments or trade accessories of or to the product that are not manufactured by Pierce, including but not limited to engines, transmissions, drivelines, axles, water pumps and generators; with respect to all such parts, components, attachments and accessories, Pierce shall assign to Buyer the applicable warranties, if any, made by the respective manufacturers thereof;

(b) any vehicle, chassis, or component, part, attachment or accessory damaged by misuse, neglect, fire, exposure to severe environmental or chemical conditions, acidic environment, improper maintenance, accident, crash, or force majeure such as natural disaster, lightning, earthquake, windstorm, hail, flood, war or riot;

(c) any vehicle, chassis or component, part, attachment or accessory that has been repaired, altered or assembled in any way by any person or entity other than Pierce which, in the sole judgment of Pierce, adversely affects the performance, stability or purpose for which it was manufactured; or

(d) products or parts which may in the ordinary course wear out and have to be replaced during the warranty period, including, but not limited to, tires, fluids, gaskets and light bulbs. Pierce assumes no responsibility for the assembly of its parts or subassemblies into finishing products or vehicles unless the assembly is performed by Pierce.

The original purchaser may void this warranty in part or in its entirety if the product is repaired or replaced (a) without prior written approval of the Pierce Customer Service Department; or (b) at a facility which has not been approved by Pierce as to technical capability. Any repairs, modifications, alterations or aftermarket parts added after manufacture without the authorization of Pierce may void this warranty.

2. DISCLAIMERS OF WARRANTIES

THE WARRANTY SET FORTH IN PARAGRAPH 1 IS THE SOLE AND EXCLUSIVE WARRANTY GIVEN BY PIERCE. PIERCE HEREBY DISCLAIMS AND EXCLUDES ALL OTHER WARRANTIES, WHETHER EXPRESS, IMPLIED OR STATUTORY, INCLUDING WITHOUT LIMITATION ANY WARRANTY OF MERCHANTABILITY, ANY WARRANTY OF FITNESS FOR A PARTICULAR PURPOSE, AND ANY WARRANTIES ARISING FROM COURSE OF DEALING OR USAGE OF TRADE.

3. BUYER'S EXCLUSIVE REMEDY.

If the product fails to conform to the warranty set forth in paragraph 1 during the warranty period, and such nonconformity is not due to misuse, neglect, accident or improper maintenance, Buyer must notify Pierce within the time period specified in paragraph 1, and shall make the product available for inspection by Pierce or its designated agent. At the request of Pierce, any allegedly defective product shall be returned to Pierce by Buyer for examination and/or repair. Buyer shall be responsible for the cost of such transportation, and for risk of loss of or damage to the product during transportation. Within a reasonable time, Pierce shall repair or replace (at Pierce's option and expense) any nonconforming or defective parts. Repair or replacement shall be made only by a facility approved in advance in writing by Pierce. THIS REMEDY SHALL BE THE EXCLUSIVE AND SOLE REMEDY FOR ANY BREACH OF WARRANTY.

4. EXCLUSION OF CONSEQUENTIAL AND INCIDENTAL DAMAGES.

Notwithstanding anything to the contrary herein or in any agreement between Pierce and Buyer, IN NO EVENT SHALL PIERCE BE LIABLE FOR ANY CONSEQUENTIAL, INCIDENTAL, SPECIAL, INDIRECT, OR PUNITIVE DAMAGES WHATSOEVER, WHETHER ARISING OUT OF BREACH OF CONTRACT, WARRANTY, TORT (INCLUDING NEGLIGENCE AND STRICT LIABILITY) OR OTHER THEORY OF LAW OR EQUITY, WITH RESPECT TO VEHICLES OR OTHER PRODUCTS SOLD BY PIERCE, OR THEIR OPERATION OR FAILURE TO OPERATE, OR ANY DEFECTS THEREIN, OR ANY UNDERTAKINGS, ACTS OR OMISSIONS RELATED THERETO, REGARDLESS OF WHETHER PIERCE HAS BEEN INFORMED OF THE POSSIBILITY OF ANY SUCH DAMAGES. Without limiting the generality of the foregoing, Pierce specifically disclaims any liability for property or personal injury damages, penalties, damages for lost profits or revenues, loss of vehicles or products or any associated equipment, cost of substitute vehicles or products, down-time, delay damages, any other types of economic loss, or for any claims by any third party for any such damages.

Note: Any Surety Bond, if a part of the sale of the vehicle as to which this limited warranty is provided, applies only to this Pierce Basic One Year Limited Warranty for such vehicle, and not to other warranties made by Pierce in a separate document (if any) or to the warranties (if any) made by any manufacturer (other than Pierce) of any part, component, attachment or accessory that is incorporated into or attached to the vehicle.

WARRANTY

MODEL YEAR 2021 VEHICLES

Warranty coverage is essential to protecting your investment. But understanding the full details of your coverage can be challenging. This straightforward approach allows you, our valued customer, to better understand how your specific vehicle applications will be covered in your region. Our component warranty coverage is provided according to vocation/usage categories listed below.

- Linehaul covers high mileage operation (over 60,000 miles/year) on well-maintained major highways of concrete or asphalt construction.
- General Service covers moderate mileage operations (less than 60,000 miles/year) on well-maintained public roads (less than 10 percent off-road) typically with less than three (3) stops per mile.
- Heavy Service (Vocational) covers vehicles with more than 10 percent off-road OR moderate to frequent starts/stops typically with more than three (3) stops per mile.
- Off-Highway Service covers lower mileage operations. Vehicles are not typically licensed for highway use.

How to Read Warranty Coverage (Example)		
Number of Years	**Mileage (in thousands) Unl=Unlimited**	**P=Parts Only P&L=Parts & Labor**
3	300	P

- The standard aftermarket warranty for WABCO products - including WABCO Original parts, WABCO Reman Solutions, ProVia quality aftermarket parts and WABCO retrofit solutions - is one year, parts only from in-service date when purchased from ZF distributor networks or its affiliates and/or subsidiaries.

WABCO

LINEHAUL/GENERAL SERVICE WARRANTY INFORMATION

LINEHAUL/GENERAL SERVICE VEHICLES

- Aerial Ladder Truck
- Aerial Platform
- Ambulance
- Auto Hauler
- Beverage Truck
- Bulk Hauler
- Chip Hauler (Truck)
- Cross Country Coach
- Doubles
- Flatbed
- Front Engine Commercial Chassis
- Front Engine Integral Coach
- General Freight
- Grain Hauler
- Intercity Coach
- Intermodal Chassis
- Livestock Hauler
- Meat Packer
- Moving Van
- Municipal Truck
- Pipe Hauler
- Platform Auto Hauler
- Pumper
- Rear Engine Integral Coach
- Recreational Vehicles
- Refrigerated Freight
- School Bus
- Stake Truck
- Tanker
- Tanker Truck
- Triples
- Tour Bus
- Wrecker

LINEHAUL TYPICALLY IS

- High mileage operation (over 60,000 miles/year)
- Well maintained major highways of concrete or asphalt construction

GENERAL SERVICE TYPICALLY IS

- Moderate mileage operations (less than 60,000 miles/year)
- Well maintained public roads (less than 10% off-road)
- Less than three (3) stops per mile

WABCO Components[1]	
Air Management	
Air Brake Valves	1/100/P&L
Trailer Lift Axle Control Valve	
Trailer Control Line Filter[3]	
Air Compressors (ALL)[2]	2/200/P&L
Air Dryers (ALL)	3/300/P&L
Aerodynamics	
OptiFlow® TrailerSkirt	2/UnU/P
OptiFlow® Trailer Tail and AutoTail	2/Unl/P
Braking Systems	
ABS (Anti-Lock Braking System) Air	3/300/P&L
ABS (Anti-Lock Braking System) Hydraulic	
Electronic Braking System (EBS)	
Electronic Stability Control (ESC)	
Roll Stability Control (RSS)	
Trailer Roll Stability Support (RSS)	
Trailer ABS (Anti-Lock Braking System)[3]	
Driveline Suspension Control	
Clutch Controls	2/200/P&L
Leveling Valves	1/100/P&L
OptiRide® Automated Manual Transmission (AMT)	
OptiRide® Electronically Controlled Air Suspension (ECAS)	3/300/P&L

WABCO Components[1] (cont.)	
Safety	
OnGuardACTIVE®	3/300/P&L
OnLane®	
OnLaneALERT®	
OnSide®	
Trailer SafeStart™	
Trailer TailGUARD™	
Telematics	
TrailerCAST™ Telematics Device	3/300/P&L
Wheel End Solutions	
EasyFit™ Slack Adjuster	6/600/P
MAXXUS™ Truck Air Disc Brake	5/500/P&L
IVTM - Wheel Module	6/P
IVTM - All Other Products	2/P
Pan 17 and 19 Air Disc Brake	2/Unl/P and 1/Unl/L
Pan 22 Air Disc Brake	5/500/P and 1/L
TRISTOP™ D Actuator w/ IBV or IRB	6/600/P
TRISTOP™ D Actuator	3/300/P
UNISTOP™ Actuator	2/200/P
Trailer MAXX22T™ Air Disc Brake	5/500/P and 1/L

[1] ZF and WABCO branded components. [2] WABCO compressors installed on Cummins, Mercedes, and DDC engines are not warranted or serviced by ZF. Please contact your respective dealer/distributor of those engines for warranty and servicing. [3] An extended warranty of 4/400/P will apply when a WABCO Trailer Control Line Filter is used in combination with a WABCO Trailer ABS valve.

HEAVY SERVICE (VOCATIONAL) WARRANTY INFORMATION

HEAVY SERVICE VEHICLES

- Airport Rescue Fire (ARF)
- Airport Shuttle
- Asphalt Truck
- Block Truck
- Bottom Dump Trailer Combination
- Cementing Vehicle
- City Bus
- Commercial Pick-Up
- Concrete Pumper
- Construction Material Hauler
- Crash Fire Rescue (CFR)
- Mixer
- Demolition
- Drill Rig
- Dump
- Emergency Service
- Equipment Hauling
- Flatbed Trailer Hauler
- Flatbed Truck
- Fracturing Truck
- Front Loader
- Geophysical Exploration
- Hopper Trailer Combinations
- Landscaping Truck
- Liquid Waste Hauler
- Log Hauling
- Lowboy
- Michigan Special Gravel Trains
- Michigan Special Log Hauler
- Michigan Special Steel Hauler
- Michigan Special Waste Vehicle
- Municipal Dump
- Newspaper Delivery
- Package Delivery
- Pick-up and Delivery
- Rapid Intervention Vehicle (RIV)
- Rear Loader
- Recycling Truck
- Residential Pick-Up/Waste
- Rigging Truck
- Roll-Off
- Scrap Truck
- Semi-End Dump
- Sewer/Septic Vacuum
- Shuttle Bus
- Side Loader
- Snowplow/Snowblower
- Steel Hauling
- Tanker
- Tank Truck
- Tractors with Pole Trailers
- Tractor/Trailer with Jeeps
- Transfer Dump
- Transfer Vehicle
- Transit Bus
- Trolley
- Utility Truck
- Winch Truck

HEAVY SERVICE TYPICALLY IS

- On/Off road vocations (10% or more off-road) OR
- Moderate to frequent starts/stops typically more than three (3) stops per mile

WABCO Components[1]	
Air Management	
Air Brake Valves	1/100/P&L
Air Compressors (ALL)2	
Air Dryers (ALL)	
Trailer Control Line Filter[3]	
Braking Systems	
ABS (Anti-Lock Braking System) Air	3/300/P&L
ABS (Anti-Lock Braking System) Hydraulic	2/200/P&L
Electronic Braking System (EBS)	3/300/P&L
Electronic Stability Control (ESC)	
Trailer ABS Valve[3]	
Roll Stability Control (RSS)	
Trailer Roll Stability Support (RSS)	
Driveline Suspension Control	
OptiRide® Electronically Controlled Air Suspension (ECAS)	2/200/P&L
Leveling Valves	1/100/P&L
Clutch Controls	2/200/P&L
Safety	
OnGuardACTIVE®	3/300/P&L
OnLane®	
OnLaneALERT®	
OnSide®	
Trailer SafeStart™	
Trailer TailGUARD™	
Telematics	
TrailerCAST™ Telematics Device	3/300/P&L
Wheel End Solutions	
EasyFit™ Slack Adjuster	2/200/P
MAXXUS™ Air Disc Brake	1/Unl/P&L
IVTM - Wheel Module	6/P
IVTM - All Other Products	2/P
Pan 22, 19 and 17 Air Disc Brake	1/Unl/P&L
Trailer MAXX22T™	1/Unl/P&L
TRISTOP™ D Actuator w/ IBV	3/Unl/P
TRISTOP™ D Actuator	2/200/P
UNISTOP™ Actuator	1/100/P

1 ZF and WABCO branded components. 2 WABCO compressors installed on Cummins, Mercedes, and DDC engines are not warranted or serviced by ZF. Please contact your respective dealer/distributor of those engines for warranty and servicing. 3 An extended warranty of 4/400/P will apply when a WABCO Trailer Control Line Filter is used in combination with a WABCO Trailer ABS valve.

INDUSTRIAL/OFF-HIGHWAY SERVICE WARRANTY INFORMATION

INDUSTRIAL AND OFF-HIGHWAY SERVICE TYPICALLY IS

- Low mileage operation[3]
- Vehicles are not typically licensed for highway use

Market	Common Application Types
Agriculture	Fertilizer Spreader, Tractor, Heavy Duty Ag Trailers, Harvester, Sprayer, Skid Loader, Silage Bagger, Slurry Wagons, Grain Cart
Airport Support	Pushback Tractor, Towing Tugs, Aircraft Tow Tractor, Refueling Trucks, Food Service Trucks, Baggage Tractors, De-Icing Equipment, Runway Clearing Equipment
Construction	All-Terrain Crane, Rough Terrain Crane, Excavator, Compactor, Wheel Loader, Road Roller, Motor Grader, Articulated Dump Truck, Rubber Tire Road Roller, Backhoe Loaders, Haul Trucks, Scraper Rough Terrain Forklifts, Trenchers, Drills
Forestry	Logging Forwarder, Kidder, Loaders, Yard Forklifts, Harvesters Fellers
Material Handling	Port Tractor, Rail Yard Spotter, Stevedoring Tractor, Trailer Spotter, Yard Jockey, Scissor Lift, Straddle Carrier, Manlift, Forklift, Boom Lift Telebandlers, Aerial Work Platforms
Mining	Specialized Mining, Excavator, Haul Truck, Underground Loader, Service Trucks, Wheel Loaders, Scrapers, Load Haul Dumps, Personnel Transports, Bolters, Scalers
Municipal	Street Sweeper, Utility Tractor, Utility Trucks, Tree Trimmers, Dump Trucks, Tow Trucks, Flat Bed Trucks, Winch Applications
Oil & Gas	Fracturing Trailer, Injecter Heads, Top Drives, Jack/Lift Boats, Wireline Trucks, Load-On / Load-Off
Rail	Railcar Mover, Track Layers, Grinders, Platform Crane, Locomotive Railcars, Ballast Equipment, Winch Applications

WABCO Components[1]	
Air Management	
Air Brake Valves	2/Unl/P
Air Compressors (ALL)2	
Air Dryers (ALL)	
Brake Actuation	
Air/Hydraulic Actuators	2/Unl/P
Master Cylinders	
Remote Actuators	
Slave and Wheel Cylinders	
Two Fluid Actuators	
Brake Locks	
Brake Locks (ALL)	2/Unl/P
Electric Brake Locks	
Lever Locks	
Braking Systems	
ABS (Anti-Lock Braking System) Air	1/100/P&L
ABS (Anti-Lock Braking System) Hydraulic	
Driveline Suspension Control	
Clutch Controls	1/100/P&L
Leveling Valves	
Electrohydraulics & Controls	
Electronic Pedals	2/Unl/P
Electrohydraulic Brake Valves (EBV)	
Pressure Switches	
Hydraulic Braking Solutions	
Accumulator Charging Valves	2/Unl/P
Hydraulic Throttle Controls and Switches	
Modulating Brake Valves	
Wheel End Solutions	
EasyFit™ Slack Adjuster	2/200/P
Caliper Disc Brakes	2/Unl/P
MAXXUS™ Air Disc Brake	1/Unl/P&L
Multiple Disc Brakes	2/Unl/P
IVTM - Wheel Module	6/P
IVTM - All Other Products	2/P
Pan 22, 19 and 17 Air Disc Brake	1/Unl/P&L
TRISTOP™ D Actuator w/ IBV	3/Unl/P
TRISTOP™ D Actuator	2/200/P
UNISTOP™ Actuator	1/100/P

[1] ZF and WABCO branded components. 2 WABCO compressors installed on Cummins, Mercedes, and DDC engines are not warranted or serviced by ZF. Please contact your respective dealer/distributor of those engines for warranty and servicing. 3 Equivalent hours of service limit: 2,000 hours for all components.

TERMS AND CONDITIONS

COVERAGE EXCLUSIONS

PRODUCT DESCRIPTION

ALL PRODUCTS

This Warranty shall not apply to the following, but not limited to: (1) damage to the product or its component parts caused by incorrect use, installation, maintenance or repair, including without limitation (a) improper fit of mating components or brackets, damaged threads, cut, broken, chafed, pinched or otherwise damaged wiring (sensors, harnesses and connectors), (b) sensors damaged during removal when seized in block, or associated with sensor adjustments/ alignments, and (c) damage resulting from the use or installation of non-genuine WABCO components or materials; (2) damage to the product, its component parts, or diminished product or component part performance due to incorrect operation, deviation from approved conditions or misapplication; (3) any unauthorized disassembly of the product or its component parts including without limitation (a) obliterated, defaced or missing WABCO or WABCO name plate, serial numbers or label identifying the device as a ZF product or WABCO component, (b) changes to sealed adjusting screws, and (c) opening or attempted repair of non-serviceable components; (4) malfunction of the component due to internal contamination of the vehicle system including without limitation (a) water and other contamination damage that is due to the use of a non-genuine air dryer cartridge or (b) valve failures due to contamination in air system, (5) complaints associated with noise, (6) damage resulting from corrosion (including oxidation of electrical devices and connections).

AIR DRYERS

Mounting brackets (see vehicle OEM). Desiccant cartridge housing only.

AIR SYSTEM COMPONENTS

Normal wear items; Gladhand seals, dash valve knobs, valve actuation handles, treadles, pedals.

ABS, ELECTRONIC STABILITY CONTROL (ESC), ROLL STABILITY CONTROL (RSC), OPTIRIDE®, ONGUARD® AND ONLANE®, COLLECTIVELY "ELECTRONICS"

Failure of electronic components due to overvoltage condition, improper grounding, electrostatic discharge (ESD), improper shielding, electromagnetic interference (EMI), or other wiring or installation issues. Malfunctions and failure codes caused by other electronic subsystem failures (data bus, engine, transmission, dashboard, etc.)

HYDRAULIC COMPONENTS

For certain components, brake fluid DOT3 or DOT4 is used as the operating medium. Use of any other fluid will void all warranties associated with that component. For hydraulic braking applications the brake fluid is considered a maintenance item. Maintenance intervals are listed in TB-1367.

COVERAGE LIMITATIONS

PRODUCT DESCRIPTION

ALL PRODUCTS

Any claim beyond 60 days from date of repair will not be accepted or honored under this warranty program.

Products purchased on an incomplete vehicle (glider) are limited to one year, 1/Unl/P.

For vehicles that operate full- or part-time outside of the United States and Canada, a 1-Year/Unlimited Miles parts only (1/Unl/P) will apply.

TOOLBOX PLUS™ DIAGNOSTIC SOFTWARE

Proper diagnostics of WABCO Electronics may require the latest version of TOOLBOX PLUS™. Additional labor due to use of an outdated version of TOOLBOX™ software and/or the time to purchase or install the latest version of TOOLBOX PLUS™ are not covered under product warranty.

TERMS AND CONDITIONS

(1) What is Covered by this Commercial Warranty?
ZF CV Systems North America LLC and its North American subsidiaries and affiliates (ZF) warrant to the owner ("Owner") that the components listed in this publication, which have been installed by an Original Equipment Manufacturer ("OEM") as original equipment will be free from defects in material and workmanship. This warranty coverage begins from the original in-service date to the limits provided and runs concurrently with any warranties provided by OEMs and/or any distribution agreements and/or any service contracts that cover the components listed in this publication, if any. If the components listed in this publication are covered by an OEM warranty and/or service contract, then the OEM's warranty and/ or service contract shall supersede ZF's warranty and Owner shall comply with all OEM's warranty and/or service contract requirements for claims under such OEM's warranty and/or service contract until those agreements expire. Once those agreements expire and provided the ZF warranty has not expired under the terms stated above, the ZF warranty will be in effect until its expiration date.

Warranty coverage ends at the expiration of the applicable time period from the date of vehicle purchase by the first Owner, or, the applicable mileage limitation, whichever occurs first. Duration of coverage varies by component and vocation as detailed previously in this publication. Some components are warranted for parts only and the Owner must pay any labor costs associated with the repair or replacement of the component. Other components are warranted for both parts and reasonable labor to repair or replace the subject component. Additional diagnostic time due to use of an outdated version of TOOLBOX™, time to purchase or install latest version of TOOLBOX™ are the responsibility of the authorized ZF distributor networks and are not covered under product warranty. Components installed as replacements under this warranty are warranted only for the remainder of the original period of time or mileage under the original warranty.

(2) Designation of Vocational Use Required. To obtain warranty coverage, each Owner must notify ZF through the OEM new truck and/or trailer dealer of the intended vocational use of the vehicle into which the WABCO components have been incorporated prior to the vehicle in-service date. This notification may be accomplished by registering the vehicle through your OEM new truck and/or trailer dealer or with ZF directly. Failure to notify ZF of (I) the intended vocational use of the vehicle or (II) a change in vocational use from that which was originally designated, will result in the application of a one year, unlimited mileage, parts only warranty (1/Unl/P) from the initial in-service date. A second Owner and each subsequent Owner must also notify ZF as to the intended vocational use of the vehicle. This notification can be sent directly to ZF or through the OEM new truck and/or trailer dealer. The duration and mileage coverage of this warranty cannot exceed the coverage extended to the first Owner after his or her initial designation of vocational use. Coverage under ZF's warranty requires that the application of products be properly approved pursuant to OEM and ZF, approvals.

(3) What is the Cost of this Warranty? There is no charge to the Owner for this warranty.

(4) What is not Covered by this Warranty? In addition to the items listed on "Coverage Exclusions," this warranty does not cover normal wear and tear, or service items; nor does it cover a component that fails, malfunctions or is damaged as a result of (a) improper handling, storage, installation, adjustment, repair or modification including the use of unauthorized attachments or changes or modification in the vehicle's configuration, usage, or vocation from that which was originally approved by ZF, (b) accident, fire or other casualty, natural disaster, road debris, negligence, misuse, abuse, or improper use (including loading beyond the specified maximum vehicle weight or altering engine power settings to exceed the brake system capacity), or (c) improper or insufficient maintenance (including deviation from maintenance intervals, approved lubricants, or lube levels). This warranty does not cover any component or part that is not sold by ZF.

(5) To obtain service. If the owner discovers within the applicable coverage period a defect in material or workmanship, the Owner must promptly give notice to either ZF or the dealer from which the vehicle was purchased. To obtain service, the vehicle must be taken to any participating OEM dealer or ZF distributor networks' servicer. The dealer or ZF authorized servicer will inspect the vehicle and contact ZF for an evaluation of the claim. When authorized by ZF, the dealer or ZF authorized servicer will repair or replace during the term of this warranty any defective WABCO component covered by this warranty.

(6) Disclaimer of Warranty and Limitation of remedies. TO THE MAXIMUM EXTENT PERMITTED BY LAW, THE LIMITED WARRANTY SET FORTH HEREIN IS EXCLUSIVE AND IS IN LIEU OF ALL OTHER WARRANTIES, EXPRESS OR IMPLIED, ARISING BY OPERATION OF LAW OR OTHERWISE, INCLUDING, WITHOUT LIMITATION, ANY IMPLIED WARRANTY OF MERCHANTABILITY OR FITNESS FOR A PARTICULAR PURPOSE AND/OR WARRANTY FOR HIDDEN OR LATENT DEFECTS, AND IN NO EVENT WILL ZF OR ANY OF ITS AFFILIATES BE LIABLE FOR DIRECT, INDIRECT, INCIDENTAL, PROGRESSIVE, SPECIAL, OR CONSEQUENTIAL DAMAGES OF ANY KIND.

(7) Legal action. Any legal action or claim arising from or related to this Warranty, in contract or otherwise, must be commenced within one year from the accrual of that cause of action, or be barred forever. Any dispute arising in connection with this agreement shall be governed by and construed according to the laws of the State of Michigan and be brought, heard and determined exclusively in either the Circuit Court for the County of Oakland, State of Michigan or the United States District Court for the Eastern District of Michigan. The parties stipulate that the referenced venues are convenient.

(8) Remedy. The exclusive remedy under this warranty shall be the repair or replacement of the defective component at ZF's option. ZF reserves the right to require that all applicable covered components are available and/or returned to ZF for review
and evaluation. THE MAXIMUM LIABILITY, IF ANY, OF ZF FOR ALL DAMAGES, INCLUDING WITHOUT LIMITATION CONTRACT DAMAGES, BREACH OF WARRANTY, NEGLIGENCE, STRICT LIABILITY, OR OTHER TORT, IS LIMITED TO AN AMOUNT NOT TO EXCEED THE PURCHASE PRICE OF THE PRODUCT and where indicated in the product and application warranty information above, the inclusion of labor is limited to the standard repair time. THE PARTIES ACKNOWLEDGE AND AGREE THAT THE LIMITATION OF DAMAGES PROVISION SET FORTH IN THIS PARAGRAPH SURVIVES BETWEEN THE ORIGINAL END USER AND ZF EVEN IF THE EXCLUSIVE REMEDY SET FORTH ABOVE IS DEEMED TO FAIL OF ITS ESSENTIAL PURPOSE. ZF may change the design or make improvements to its Products without incurring any warranty obligation for previously manufactured Product .

(9) Entire Agreement. This is the entire agreement between ZF and the Owner about warranty and no, ZF employee, or dealer is authorized to make any additional warranty on behalf of ZF unless in writing and signed by an authorized representative of ZF.

For further product details contact your distributor or the WABCO Customer Care Center at 855-228-3203.

About ZF Friedrichshafen AG

ZF is a global technology company and supplies systems for passenger cars, commercial vehicles and industrial technology, enabling the next generation of mobility. ZF allows vehicles to see, think and act. In the four technology domains Vehicle Motion Control, Integrated Safety, Automated Driving, and Electric Mobility, ZF offers comprehensive solutions for established vehicle manufacturers and newly emerging transport and mobility service providers. ZF electrifies different kinds of vehicles. With its products, the company contributes to reducing emissions and protecting the climate.

ZF, which acquired WABCO Holdings Inc. on May 29, 2020, now has 160,000 employees worldwide with approximately 260 locations in 41 countries. In 2019, the two then-independent companies achieved sales of €36.5 billion (ZF) and $3.4 billion (WABCO). For more information, visit: **www.wabco-na.com**

© 2021 ZF CV Systems North America LLC - All rights reserved - SP1375 / 2.2021

WABCO

Fire and Rescue Apparatus

Ten (10) Year Structural Integrity
Custom Cab

Limited Warranty

1. LIMITED WARRANTY

Subject to the limitations and exclusions set forth below, Pierce Manufacturing provides the following warranty to the Buyer:

Coverage:	**The Pierce Custom Cab shall be free from structural failures caused by defects in material and workmanship**
Warranty Begins:	**The date of the original purchase invoice (issued when the product ships from the factory).**
Warranty Period Ends After:	**Ten (10) Years - or - 100,000 Miles**
Conditions and Exclusions: **See Also Paragraphs 2 thru 4**	**This warranty applies only to the cab tubular support and mounting structures and other structural components of the cab of the vehicle model, as identified in the Pierce specifications for the Fire and Rescue Apparatus.** **This warranty does not apply to damage caused by corrosion.**

This limited warranty shall apply only if the product is properly maintained in accordance with Pierce's maintenance instructions and manuals and is used in service which is normal to the particular model. Normal service means service which does not subject the product to stresses or impacts greater than normally result from careful use. If the Buyer discovers a defect or nonconformity, it must notify Pierce in writing within thirty (30) days after the date of discovery, but in any event prior to the expiration of the warranty period. THIS LIMITED WARRANTY MAY NOT BE ASSIGNED OR OTHERWISE TRANSFERRED BY THE BUYER TO ANY SUBSEQUENT USER OR PURCHASER OR TO ANY OTHER PERSON OR ENTITY.

Notwithstanding anything to the contrary herein, Pierce makes no warranty whatsoever as to:

(a) any integral parts, components, attachments or trade accessories of or to the product that are not manufactured by Pierce, including but not limited to engines, transmissions, drivelines, axles, water pumps and generators; with respect to all such parts, components, attachments and accessories, Pierce shall assign to Buyer the applicable warranties, if any, made by the respective manufacturers thereof;

(b) any vehicle, chassis, or component, part, attachment or accessory damaged by misuse, neglect, fire, exposure to severe environmental or chemical conditions, acidic environment, improper maintenance, accident, crash, or force majeure such as natural disaster, lightning, earthquake, windstorm, hail, flood, war or riot;

(c) any vehicle, chassis or component, part, attachment or accessory that has been repaired, altered or assembled in any way by any person or entity other than Pierce which, in the sole judgment of Pierce, adversely affects the performance, stability or purpose for which it was manufactured; or

(d) products or parts which may in the ordinary course wear out and have to be replaced during the warranty period, including, but not limited to, tires, fluids, gaskets and light bulbs. Pierce assumes no responsibility for the assembly of its parts or subassemblies into finishing products or vehicles unless the assembly is performed by Pierce.

The original purchaser may void this warranty in part or in its entirety if the product is repaired or replaced (a) without prior written approval of the Pierce Customer Service Department; or (b) at a facility which has not been approved by Pierce as to technical capability. Any repairs, modifications, alterations or aftermarket parts added after manufacture without the authorization of Pierce may void this warranty.

2. DISCLAIMERS OF WARRANTIES

THE WARRANTY SET FORTH IN PARAGRAPH 1 IS THE SOLE AND EXCLUSIVE WARRANTY GIVEN BY PIERCE. PIERCE HEREBY DISCLAIMS AND EXCLUDES ALL OTHER WARRANTIES, WHETHER EXPRESS, IMPLIED OR STATUTORY, INCLUDING WITHOUT LIMITATION ANY WARRANTY OF MERCHANTABILITY, ANY WARRANTY OF FITNESS FOR A PARTICULAR PURPOSE, AND ANY WARRANTIES ARISING FROM COURSE OF DEALING OR USAGE OF TRADE.

3. BUYER'S EXCLUSIVE REMEDY.

If the product fails to conform to the warranty set forth in paragraph 1 during the warranty period, and such nonconformity is not due to misuse, neglect, accident or improper maintenance, Buyer must notify Pierce within the time period specified in paragraph 1, and shall make the product available for inspection by Pierce or its designated agent. At the request of Pierce, any allegedly defective product shall be returned to Pierce by Buyer for examination and/or repair. Buyer shall be responsible for the cost of such transportation, and for risk of loss of or damage to the product during transportation. Within a reasonable time, Pierce shall repair or replace (at Pierce's option and expense) any nonconforming or defective parts. Repair or replacement shall be made only by a facility approved in advance in writing by Pierce. THIS REMEDY SHALL BE THE EXCLUSIVE AND SOLE REMEDY FOR ANY BREACH OF WARRANTY.

4. EXCLUSION OF CONSEQUENTIAL AND INCIDENTAL DAMAGES.

Notwithstanding anything to the contrary herein or in any agreement between Pierce and Buyer, IN NO EVENT SHALL PIERCE BE LIABLE FOR ANY CONSEQUENTIAL, INCIDENTAL, SPECIAL, INDIRECT, OR PUNITIVE DAMAGES WHATSOEVER, WHETHER ARISING OUT OF BREACH OF CONTRACT, WARRANTY, TORT (INCLUDING NEGLIGENCE AND STRICT LIABILITY) OR OTHER THEORY OF LAW OR EQUITY, WITH RESPECT TO VEHICLES OR OTHER PRODUCTS SOLD BY PIERCE, OR THEIR OPERATION OR FAILURE TO OPERATE, OR ANY DEFECTS THEREIN, OR ANY UNDERTAKINGS, ACTS OR OMISSIONS RELATED THERETO, REGARDLESS OF WHETHER PIERCE HAS BEEN INFORMED OF THE POSSIBILITY OF ANY SUCH DAMAGES. Without limiting the generality of the foregoing, Pierce specifically disclaims any liability for property or personal injury damages, penalties, damages for lost profits or revenues, loss of vehicles or products or any associated equipment, cost of substitute vehicles or products, down-time, delay damages, any other types of economic loss, or for any claims by any third party for any such damages.

Note: Any Surety Bond, if a part of the sale of the vehicle as to which this limited warranty is provided, applies only to this Pierce Basic One Year Limited Warranty for such vehicle, and not to other warranties made by Pierce in a separate document (if any) or to the warranties (if any) made by any manufacturer (other than Pierce) of any part, component, attachment or accessory that is incorporated into or attached to the vehicle.

Fire and Rescue Apparatus

Ten (10) Year Pro-Rated Paint and Corrosion Cab

Limited Warranty

1. LIMITED WARRANTY

Subject to the limitations and exclusions set forth below, Pierce Manufacturing provides the following warranty to the Buyer:

Coverage:	**Exterior surfaces of the cab painted by Pierce shall be free from blistering, peeling, corrosion or any other adhesion defect caused by defective manufacturing methods or paint material selection.**
Warranty Begins:	**The date of the original purchase invoice (issued when the product ships from the factory).**
Warranty Period Ends After:	**Ten (10) Years**
Conditions and Exclusions: **See Also Paragraphs 2 thru 4**	**This limited warranty is applicable to the vehicle in the following percentage costs of warranty repair, if any:** **Topcoat Durability & Appearance: Gloss, Color Retention & Cracking** **0-72 months 100%** **73-96 months 50%** **97-120 months 25%** **Integrity of Coating System: Adhesion, Blistering/Bubbling** **0-36 months 100%** **37-84 months 50%** **85-120 months 25%** **Corrosion: Dissimilar Metal and Crevice** **0-36 months 100%** **37-48 months 50%** **49-72 months 25%** **73-120 months 10%** **Corrosion Perforation** **0-120 months 100%** **This limited warranty applies only to exterior paint. Paint on the vehicle's interior is warranted only under the Pierce Basic One Year Limited Warranty.** **Items not covered by this warranty include:** **(a) Damage from lack of maintenance and cleaning (proper cleaning and maintenance procedures are detailed in the Pierce operation and maintenance manual).** **(b) UV paint fade.** **(c) Any cab not manufactured by Pierce.**

This limited warranty shall apply only if the product is properly maintained in accordance with Pierce's maintenance instructions and manuals and is used in service which is normal to the particular model. Normal service means service which does not subject the product to stresses or impacts greater than normally result from careful use. If the Buyer discovers a defect or nonconformity, it must notify Pierce in writing within thirty (30) days after the date of discovery, but in any event prior to the expiration of the warranty period. THIS LIMITED WARRANTY MAY NOT BE ASSIGNED OR OTHERWISE TRANSFERRED BY THE BUYER TO ANY SUBSEQUENT USER OR PURCHASER OR TO ANY OTHER PERSON OR ENTITY.

Notwithstanding anything to the contrary herein, Pierce makes no warranty whatsoever as to:

(a) any integral parts, components, attachments or trade accessories of or to the product that are not manufactured by Pierce, including but not limited to engines, transmissions, drivelines, axles, water pumps and generators; with respect to all such parts, components, attachments and accessories, Pierce shall assign to Buyer the applicable warranties, if any, made by the respective manufacturers thereof;

(b) any vehicle, chassis, or component, part, attachment or accessory damaged by misuse, neglect, fire, exposure to severe environmental or chemical conditions, acidic environment, improper maintenance, accident, crash, or force majeure such as natural disaster, lightning, earthquake, windstorm, hail, flood, war or riot;

(c) any vehicle, chassis or component, part, attachment or accessory that has been repaired, altered or assembled in any way by any person or entity other than Pierce which, in the sole judgment of Pierce, adversely affects the performance, stability or purpose for which it was manufactured; or

(d) products or parts which may in the ordinary course wear out and have to be replaced during the warranty period, including, but not limited to, tires, fluids, gaskets and light bulbs. Pierce assumes no responsibility for the assembly of its parts or subassemblies into finishing products or vehicles unless the assembly is performed by Pierce.

The original purchaser may void this warranty in part or in its entirety if the product is repaired or replaced (a) without prior written approval of the Pierce Customer Service Department; or (b) at a facility which has not been approved by Pierce as to technical capability. Any repairs, modifications, alterations or aftermarket parts added after manufacture without the authorization of Pierce may void this warranty.

2. DISCLAIMERS OF WARRANTIES

THE WARRANTY SET FORTH IN PARAGRAPH 1 IS THE SOLE AND EXCLUSIVE WARRANTY GIVEN BY PIERCE. PIERCE HEREBY DISCLAIMS AND EXCLUDES ALL OTHER WARRANTIES, WHETHER EXPRESS, IMPLIED OR STATUTORY, INCLUDING WITHOUT LIMITATION ANY WARRANTY OF MERCHANTABILITY, ANY WARRANTY OF FITNESS FOR A PARTICULAR PURPOSE, AND ANY WARRANTIES ARISING FROM COURSE OF DEALING OR USAGE OF TRADE.

3. BUYER'S EXCLUSIVE REMEDY.

If the product fails to conform to the warranty set forth in paragraph 1 during the warranty period, and such nonconformity is not due to misuse, neglect, accident or improper maintenance, Buyer must notify Pierce within the time period specified in paragraph 1, and shall make the product available for inspection by Pierce or its designated agent. At the request of Pierce, any allegedly defective product shall be returned to Pierce by Buyer for examination and/or repair. Buyer shall be responsible for the cost of such transportation, and for risk of loss of or damage to the product during transportation. Within a reasonable time, Pierce shall repair or replace (at Pierce's option and expense) any nonconforming or defective parts. Repair or replacement shall be made only by a facility approved in advance in writing by Pierce. THIS REMEDY SHALL BE THE EXCLUSIVE AND SOLE REMEDY FOR ANY BREACH OF WARRANTY.

4. EXCLUSION OF CONSEQUENTIAL AND INCIDENTAL DAMAGES.

Notwithstanding anything to the contrary herein or in any agreement between Pierce and Buyer, IN NO EVENT SHALL PIERCE BE LIABLE FOR ANY CONSEQUENTIAL, INCIDENTAL, SPECIAL, INDIRECT, OR PUNITIVE DAMAGES WHATSOEVER, WHETHER ARISING OUT OF BREACH OF CONTRACT, WARRANTY, TORT (INCLUDING NEGLIGENCE AND STRICT LIABILITY) OR OTHER THEORY OF LAW OR EQUITY, WITH RESPECT TO VEHICLES OR OTHER PRODUCTS SOLD BY PIERCE, OR THEIR OPERATION OR FAILURE TO OPERATE, OR ANY DEFECTS THEREIN, OR ANY UNDERTAKINGS, ACTS OR OMISSIONS RELATED THERETO, REGARDLESS OF WHETHER PIERCE HAS BEEN INFORMED OF THE POSSIBILITY OF ANY SUCH DAMAGES. Without limiting the generality of the foregoing, Pierce specifically disclaims any liability for property or personal injury damages, penalties, damages for lost profits or revenues, loss of vehicles or products or any associated equipment, cost of substitute vehicles or products, down-time, delay damages, any other types of economic loss, or for any claims by any third party for any such damages.

Note: Any Surety Bond, if a part of the sale of the vehicle as to which this limited warranty is provided, applies only to this Pierce Basic One Year Limited Warranty for such vehicle, and not to other warranties made by Pierce in a separate document (if any) or to the warranties (if any) made by any manufacturer (other than Pierce) of any part, component, attachment or accessory that is incorporated into or attached to the vehicle.

Fire and Rescue Apparatus

Five (5) Year Material and Workmanship
Command Zone Electronics

Limited Warranty

1. LIMITED WARRANTY

Subject to the limitations and exclusions set forth below, Pierce Manufacturing provides the following warranty to the Buyer:

Coverage:	**Command Zone control modules shall be free from failures caused by defects in material and workmanship**
Warranty Begins:	**The date of the original purchase invoice (issued when the product ships from the factory).**
Warranty Period Ends After:	**Five (5) Years**
Conditions and Exclusions: **See Also Paragraphs 2 thru 4**	**This limited warranty applies to all of the control modules for the Command Zone system, including the full color graphic displays. Related wire harnesses, cables and connectors are not covered under this limited warranty and are instead covered under the Pierce One Year Basic Apparatus Limited Warranty.**

This limited warranty shall apply only if the product is properly maintained in accordance with Pierce's maintenance instructions and manuals and is used in service which is normal to the particular model. Normal service means service which does not subject the product to stresses or impacts greater than normally result from careful use. If the Buyer discovers a defect or nonconformity, it must notify Pierce in writing within thirty (30) days after the date of discovery, but in any event prior to the expiration of the warranty period. THIS LIMITED WARRANTY MAY NOT BE ASSIGNED OR OTHERWISE TRANSFERRED BY THE BUYER TO ANY SUBSEQUENT USER OR PURCHASER OR TO ANY OTHER PERSON OR ENTITY.

Notwithstanding anything to the contrary herein, Pierce makes no warranty whatsoever as to:

(a) any integral parts, components, attachments or trade accessories of or to the product that are not manufactured by Pierce, including but not limited to engines, transmissions, drivelines, axles, water pumps and generators; with respect to all such parts, components, attachments and accessories, Pierce shall assign to Buyer the applicable warranties, if any, made by the respective manufacturers thereof;

(b) any vehicle, chassis, or component, part, attachment or accessory damaged by misuse, neglect, fire, exposure to severe environmental or chemical conditions, acidic environment, improper maintenance, accident, crash, or force majeure such as natural disaster, lightning, earthquake, windstorm, hail, flood, war or riot;

(c) any vehicle, chassis or component, part, attachment or accessory that has been repaired, altered or assembled in any way by any person or entity other than Pierce which, in the sole judgment of Pierce, adversely affects the performance, stability or purpose for which it was manufactured; or

(d) products or parts which may in the ordinary course wear out and have to be replaced during the warranty period, including, but not limited to, tires, fluids, gaskets and light bulbs. Pierce assumes no responsibility for the assembly of its parts or subassemblies into finishing products or vehicles unless the assembly is performed by Pierce.

The original purchaser may void this warranty in part or in its entirety if the product is repaired or replaced (a) without prior written approval of the Pierce Customer Service Department; or (b) at a facility which has not been approved by Pierce as to technical capability. Any repairs, modifications, alterations or aftermarket parts added after manufacture without the authorization of Pierce may void this warranty.

2. DISCLAIMERS OF WARRANTIES

THE WARRANTY SET FORTH IN PARAGRAPH 1 IS THE SOLE AND EXCLUSIVE WARRANTY GIVEN BY PIERCE. PIERCE HEREBY DISCLAIMS AND EXCLUDES ALL OTHER WARRANTIES, WHETHER EXPRESS, IMPLIED OR STATUTORY, INCLUDING WITHOUT LIMITATION ANY WARRANTY OF MERCHANTABILITY, ANY WARRANTY OF FITNESS FOR A PARTICULAR PURPOSE, AND ANY WARRANTIES ARISING FROM COURSE OF DEALING OR USAGE OF TRADE.

3. BUYER'S EXCLUSIVE REMEDY.

If the product fails to conform to the warranty set forth in paragraph 1 during the warranty period, and such nonconformity is not due to misuse, neglect, accident or improper maintenance, Buyer must notify Pierce within the time period specified in paragraph 1, and shall make the product available for inspection by Pierce or its designated agent. At the request of Pierce, any allegedly defective product shall be returned to Pierce by Buyer for examination and/or repair. Buyer shall be responsible for the cost of such transportation, and for risk of loss of or damage to the product during transportation. Within a reasonable time, Pierce shall repair or replace (at Pierce's option and expense) any nonconforming or defective parts. Repair or replacement shall be made only by a facility approved in advance in writing by Pierce. THIS REMEDY SHALL BE THE EXCLUSIVE AND SOLE REMEDY FOR ANY BREACH OF WARRANTY.

4. EXCLUSION OF CONSEQUENTIAL AND INCIDENTAL DAMAGES.

Notwithstanding anything to the contrary herein or in any agreement between Pierce and Buyer, IN NO EVENT SHALL PIERCE BE LIABLE FOR ANY CONSEQUENTIAL, INCIDENTAL, SPECIAL, INDIRECT, OR PUNITIVE DAMAGES WHATSOEVER, WHETHER ARISING OUT OF BREACH OF CONTRACT, WARRANTY, TORT (INCLUDING NEGLIGENCE AND STRICT LIABILITY) OR OTHER THEORY OF LAW OR EQUITY, WITH RESPECT TO VEHICLES OR OTHER PRODUCTS SOLD BY PIERCE, OR THEIR OPERATION OR FAILURE TO OPERATE, OR ANY DEFECTS THEREIN, OR ANY UNDERTAKINGS, ACTS OR OMISSIONS RELATED THERETO, REGARDLESS OF WHETHER PIERCE HAS BEEN INFORMED OF THE POSSIBILITY OF ANY SUCH DAMAGES. Without limiting the generality of the foregoing, Pierce specifically disclaims any liability for property or personal injury damages, penalties, damages for lost profits or revenues, loss of vehicles or products or any associated equipment, cost of substitute vehicles or products, down-time, delay damages, any other types of economic loss, or for any claims by any third party for any such damages.

Note: Any Surety Bond, if a part of the sale of the vehicle as to which this limited warranty is provided, applies only to this Pierce Basic One Year Limited Warranty for such vehicle, and not to other warranties made by Pierce in a separate document (if any) or to the warranties (if any) made by any manufacturer (other than Pierce) of any part, component, attachment or accessory that is incorporated into or attached to the vehicle.

Fire and Rescue Apparatus

54 Months Material and Workmanship

Camera System

Limited Warranty

1. LIMITED WARRANTY

Subject to the limitations and exclusions set forth below, Pierce Manufacturing provides the following warranty to the Buyer:

Coverage:	**This limited warranty covers repairs to correct any defect related to materials or workmanship of the Sharpvision camera system installed on the apparatus occuring during the warranty period.**
Warranty Begins:	**The date of delivery.**
Warranty Period Ends After:	**Fifty - Four (54) months**
Conditions and Exclusions: **See Also Paragraphs 2 thru 4**	**This limited warranty does not apply to related wire harnesses, cables, and connectors, which are covered by the Pierce one (1) year basic apparatus limited warranty.**

This limited warranty shall apply only if the product is properly maintained in accordance with Pierce's maintenance instructions and manuals and is used in service which is normal to the particular model. Normal service means service which does not subject the product to stresses or impacts greater than normally result from careful use. If the Buyer discovers a defect or nonconformity, it must notify Pierce in writing within thirty (30) days after the date of discovery, but in any event prior to the expiration of the warranty period. THIS LIMITED WARRANTY MAY NOT BE ASSIGNED OR OTHERWISE TRANSFERRED BY THE BUYER TO ANY SUBSEQUENT USER OR PURCHASER OR TO ANY OTHER PERSON OR ENTITY.

Notwithstanding anything to the contrary herein, Pierce makes no warranty whatsoever as to:

(a) any integral parts, components, attachments or trade accessories of or to the product that are not manufactured by Pierce, including but not limited to engines, transmissions, drivelines, axles, water pumps and generators; with respect to all such parts, components, attachments and accessories, Pierce shall assign to Buyer the applicable warranties, if any, made by the respective manufacturers thereof;

(b) any vehicle, chassis, or component, part, attachment or accessory damaged by misuse, neglect, fire, exposure to severe environmental or chemical conditions, acidic environment, improper maintenance, accident, crash, or force majeure such as natural disaster, lightning, earthquake, windstorm, hail, flood, war or riot;

(c) any vehicle, chassis or component, part, attachment or accessory that has been repaired, altered or assembled in any way by any person or entity other than Pierce which, in the sole judgment of Pierce, adversely affects the performance, stability or purpose for which it was manufactured; or

(d) products or parts which may in the ordinary course wear out and have to be replaced during the warranty period, including, but not limited to, tires, fluids, gaskets and light bulbs. Pierce assumes no responsibility for the assembly of its parts or subassemblies into finishing products or vehicles unless the assembly is performed by Pierce.

The original purchaser may void this warranty in part or in its entirety if the product is repaired or replaced (a) without prior written approval of the Pierce Customer Service Department; or (b) at a facility which has not been approved by Pierce as to technical capability. Any repairs, modifications, alterations or aftermarket parts added after manufacture without the authorization of Pierce may void this warranty.

2. DISCLAIMERS OF WARRANTIES

THE WARRANTY SET FORTH IN PARAGRAPH 1 IS THE SOLE AND EXCLUSIVE WARRANTY GIVEN BY PIERCE. PIERCE HEREBY DISCLAIMS AND EXCLUDES ALL OTHER WARRANTIES, WHETHER EXPRESS, IMPLIED OR STATUTORY, INCLUDING WITHOUT LIMITATION ANY WARRANTY OF MERCHANTABILITY, ANY WARRANTY OF FITNESS FOR A PARTICULAR PURPOSE, AND ANY WARRANTIES ARISING FROM COURSE OF DEALING OR USAGE OF TRADE.

3. BUYER'S EXCLUSIVE REMEDY.

If the product fails to conform to the warranty set forth in paragraph 1 during the warranty period, and such nonconformity is not due to misuse, neglect, accident or improper maintenance, Buyer must notify Pierce within the time period specified in paragraph 1, and shall make the product available for inspection by Pierce or its designated agent. At the request of Pierce, any allegedly defective product shall be returned to Pierce by Buyer for examination and/or repair. Buyer shall be responsible for the cost of such transportation, and for risk of loss of or damage to the product during transportation. Within a reasonable time, Pierce shall repair or replace (at Pierce's option and expense) any nonconforming or defective parts. Repair or replacement shall be made only by a facility approved in advance in writing by Pierce. THIS REMEDY SHALL BE THE EXCLUSIVE AND SOLE REMEDY FOR ANY BREACH OF WARRANTY.

4. EXCLUSION OF CONSEQUENTIAL AND INCIDENTAL DAMAGES.

Notwithstanding anything to the contrary herein or in any agreement between Pierce and Buyer, IN NO EVENT SHALL PIERCE BE LIABLE FOR ANY CONSEQUENTIAL, INCIDENTAL, SPECIAL, INDIRECT, OR PUNITIVE DAMAGES WHATSOEVER, WHETHER ARISING OUT OF BREACH OF CONTRACT, WARRANTY, TORT (INCLUDING NEGLIGENCE AND STRICT LIABILITY) OR OTHER THEORY OF LAW OR EQUITY, WITH RESPECT TO VEHICLES OR OTHER PRODUCTS SOLD BY PIERCE, OR THEIR OPERATION OR FAILURE TO OPERATE, OR ANY DEFECTS THEREIN, OR ANY UNDERTAKINGS, ACTS OR OMISSIONS RELATED THERETO, REGARDLESS OF WHETHER PIERCE HAS BEEN INFORMED OF THE POSSIBILITY OF ANY SUCH DAMAGES. Without limiting the generality of the foregoing, Pierce specifically disclaims any liability for property or personal injury damages, penalties, damages for lost profits or revenues, loss of vehicles or products or any associated equipment, cost of substitute vehicles or products, down-time, delay damages, any other types of economic loss, or for any claims by any third party for any such damages.

Note: Any Surety Bond, if a part of the sale of the vehicle as to which this limited warranty is provided, applies only to this Pierce Basic One Year Limited Warranty for such vehicle, and not to other warranties made by Pierce in a separate document (if any) or to the warranties (if any) made by any manufacturer (other than Pierce) of any part, component, attachment or accessory that is incorporated into or attached to the vehicle.

Fire and Rescue Apparatus

Ten (10) Year Material and Workmanship
Pierce 12V LED Strip Light
Limited Warranty

1. LIMITED WARRANTY

Subject to the limitations and exclusions set forth below, Pierce Manufacturing provides the following warranty to the Buyer:

Coverage:	**This limited warranty covers repairs to correct any defect related to materials or workmanship of the Pierce 12V LED strip lights installed on the apparatus occuring during the warranty period.**
Warranty Begins:	**The date of the original purchase invoice (issued when the product ships from the factory).**
Warranty Period Ends After:	**Ten (10) Year**
Conditions and Exclusions: **See Also Paragraphs 2 thru 4**	**This limited warranty does not apply to related wire harnesses, cables, and connectors, which are covered by the Pierce one (1) year basic apparatus limited warranty.**

This limited warranty shall apply only if the product is properly maintained in accordance with Pierce's maintenance instructions and manuals and is used in service which is normal to the particular model. Normal service means service which does not subject the product to stresses or impacts greater than normally result from careful use. If the Buyer discovers a defect or nonconformity, it must notify Pierce in writing within thirty (30) days after the date of discovery, but in any event prior to the expiration of the warranty period. THIS LIMITED WARRANTY MAY NOT BE ASSIGNED OR OTHERWISE TRANSFERRED BY THE BUYER TO ANY SUBSEQUENT USER OR PURCHASER OR TO ANY OTHER PERSON OR ENTITY.

Notwithstanding anything to the contrary herein, Pierce makes no warranty whatsoever as to:

(a) any integral parts, components, attachments or trade accessories of or to the product that are not manufactured by Pierce, including but not limited to engines, transmissions, drivelines, axles, water pumps and generators; with respect to all such parts, components, attachments and accessories, Pierce shall assign to Buyer the applicable warranties, if any, made by the respective manufacturers thereof;

(b) any vehicle, chassis, or component, part, attachment or accessory damaged by misuse, neglect, fire, exposure to severe environmental or chemical conditions, acidic environment, improper maintenance, accident, crash, or force majeure such as natural disaster, lightning, earthquake, windstorm, hail, flood, war or riot;

(c) any vehicle, chassis or component, part, attachment or accessory that has been repaired, altered or assembled in any way by any person or entity other than Pierce which, in the sole judgment of Pierce, adversely affects the performance, stability or purpose for which it was manufactured; or

(d) products or parts which may in the ordinary course wear out and have to be replaced during the warranty period, including, but not limited to, tires, fluids, gaskets and light bulbs. Pierce assumes no responsibility for the assembly of its parts or subassemblies into finishing products or vehicles unless the assembly is performed by Pierce.

The original purchaser may void this warranty in part or in its entirety if the product is repaired or replaced (a) without prior written approval of the Pierce Customer Service Department; or (b) at a facility which has not been approved by Pierce as to technical capability. Any repairs, modifications, alterations or aftermarket parts added after manufacture without the authorization of Pierce may void this warranty.

2. DISCLAIMERS OF WARRANTIES

THE WARRANTY SET FORTH IN PARAGRAPH 1 IS THE SOLE AND EXCLUSIVE WARRANTY GIVEN BY PIERCE. PIERCE HEREBY DISCLAIMS AND EXCLUDES ALL OTHER WARRANTIES, WHETHER EXPRESS, IMPLIED OR STATUTORY, INCLUDING WITHOUT LIMITATION ANY WARRANTY OF MERCHANTABILITY, ANY WARRANTY OF FITNESS FOR A PARTICULAR PURPOSE, AND ANY WARRANTIES ARISING FROM COURSE OF DEALING OR USAGE OF TRADE.

3. BUYER'S EXCLUSIVE REMEDY.

If the product fails to conform to the warranty set forth in paragraph 1 during the warranty period, and such nonconformity is not due to misuse, neglect, accident or improper maintenance, Buyer must notify Pierce within the time period specified in paragraph 1, and shall make the product available for inspection by Pierce or its designated agent. At the request of Pierce, any allegedly defective product shall be returned to Pierce by Buyer for examination and/or repair. Buyer shall be responsible for the cost of such transportation, and for risk of loss of or damage to the product during transportation. Within a reasonable time, Pierce shall repair or replace (at Pierce's option and expense) any nonconforming or defective parts. Repair or replacement shall be made only by a facility approved in advance in writing by Pierce. THIS REMEDY SHALL BE THE EXCLUSIVE AND SOLE REMEDY FOR ANY BREACH OF WARRANTY.

4. EXCLUSION OF CONSEQUENTIAL AND INCIDENTAL DAMAGES.

Notwithstanding anything to the contrary herein or in any agreement between Pierce and Buyer, IN NO EVENT SHALL PIERCE BE LIABLE FOR ANY CONSEQUENTIAL, INCIDENTAL, SPECIAL, INDIRECT, OR PUNITIVE DAMAGES WHATSOEVER, WHETHER ARISING OUT OF BREACH OF CONTRACT, WARRANTY, TORT (INCLUDING NEGLIGENCE AND STRICT LIABILITY) OR OTHER THEORY OF LAW OR EQUITY, WITH RESPECT TO VEHICLES OR OTHER PRODUCTS SOLD BY PIERCE, OR THEIR OPERATION OR FAILURE TO OPERATE, OR ANY DEFECTS THEREIN, OR ANY UNDERTAKINGS, ACTS OR OMISSIONS RELATED THERETO, REGARDLESS OF WHETHER PIERCE HAS BEEN INFORMED OF THE POSSIBILITY OF ANY SUCH DAMAGES. Without limiting the generality of the foregoing, Pierce specifically disclaims any liability for property or personal injury damages, penalties, damages for lost profits or revenues, loss of vehicles or products or any associated equipment, cost of substitute vehicles or products, down-time, delay damages, any other types of economic loss, or for any claims by any third party for any such damages.

Note: Any Surety Bond, if a part of the sale of the vehicle as to which this limited warranty is provided, applies only to this Pierce Basic One Year Limited Warranty for such vehicle, and not to other warranties made by Pierce in a separate document (if any) or to the warranties (if any) made by any manufacturer (other than Pierce) of any part, component, attachment or accessory that is incorporated into or attached to the vehicle.

NEW PRODUCT WARRANTY

PARTICIPATING OEM SALES
DISTRIBUTOR SALES

LIMITED WARRANTY ON NEW ALLISON AUTOMATIC TRANSMISSIONS USED IN EMERGENCY VEHICLE APPLICATIONS

Allison Transmission will provide for repairs or replacement, at its option, during the warranty period of each new Allison transmission listed below that is installed in an Emergency Vehicle in accordance with the following terms, conditions, and limitations.

WHAT IS COVERED

- **WARRANTY APPLIES —** This warranty is for new Allison transmission models listed below installed in an Emergency Vehicle and is provided to the original and any subsequent owner(s) of the vehicle during the warranty period.
- **REPAIRS COVERED —** The warranty covers repairs or replacement, at Allison Transmission's option, to correct any transmission malfunction resulting from defects in material or workmanship occurring during the warranty period. Needed repairs or replacements will be performed using the method Allison Transmission determines most appropriate under the circumstances.
- **TOWING —** Towing is covered to the nearest Allison Transmission Distributor or authorized Dealer only when necessary to prevent further damage to your transmission.
- **PAYMENT TERMS —** Warranty repairs, including parts and labor, will be covered per the schedule shown in the chart contained in section "APPLICABLE MODELS, WARRANTY LIMITATIONS, AND ADJUSTMENT SCHEDULE."
- **OBTAINING REPAIRS —** To obtain warranty repairs, take the vehicle to any Allison Transmission Distributor or authorized Dealer within a reasonable amount of time and request the needed repairs. A reasonable amount of time must be allowed for the Distributor or Dealer to perform necessary repairs.
- **TRANSMISSION REMOVAL AND REINSTALLATION —** Labor costs for the removal and re-installation of the transmission, when necessary to make a warranty repair, are covered by this warranty.
- **WARRANTY PERIOD —** The warranty period for all coverages shall begin on the date the transmission is delivered to the first retail purchaser, with the following exception:

  Demonstration Service - A transmission in a new truck or bus may be demonstrated to a total of 5000 miles (8000 kilometers). If the vehicle is within this limit when sold to a retail purchaser, the warranty start date is the date of purchase. Normal warranty services are applicable to the demonstrating Dealer. Should the truck or bus be sold to a retail purchaser after these limits are reached, the warranty period will begin on the date the vehicle was first placed in demonstration service and the purchaser will be entitled to the remaining warranty.

APPLICABLE MODELS, WARRANTY LIMITATIONS, AND ADJUSTMENT SCHEDULE

APPLICABLE MODELS	WARRANTY LIMITATIONS (Whichever occurs first)		ADJUSTMENT CHARGE TO BE PAID BY THE CUSTOMER	
	Months	Transmission Miles Or Kilometers	Parts	Labor
MT, MD 3000, 3200, 3500, 3700	0–24	No Limit	No Charge	No Charge
HT with Hydraulic Controls	0–24	No Limit	No Charge	No Charge
AT, 1000 Series™, 2000 Series™, 2400 Series™	0–36	No Limit	No Charge	No Charge
HT with Electronic Controls	0–60	No Limit	No Charge	No Charge
HD 1000 EVS, 2100 EVS, 2200 EVS 2350 EVS, 2500 EVS, 2550 EVS, 3000 EVS, 3500 EVS, 4000, 4000 EVS, 4500, 4500 EVS, 4700, 4700 EVS, 4800, 4800 EVS	0–60	No Limit	No Charge	No Charge

WHAT IS NOT COVERED

- **DAMAGE DUE TO ACCIDENT, MISUSE, or ALTERATION —** Defects and damage caused as the result of any of the following are not covered:
  - — Flood, collision, fire, theft, freezing, vandalism, riot, explosion, or objects striking the vehicle;
  - — Misuse of the vehicle;
  - — Installation into unapproved applications and installations;
  - — Alterations or modification of the transmission or the vehicle, and
  - — Damage resulting from improper storage (refer to long-term storage procedure outlined in the applicable Allison Service Manual)
  - — Anything other than defects in Allison Transmission material or workmanship

  NOTE: This warranty is void on transmissions used in vehicles currently or previously titled as salvaged, scrapped, junked, or totaled.
- **CHASSIS, BODY, and COMPONENTS —** The chassis and body company (assemblers) and other component and equipment manufacturers are solely responsible for warranties on the chassis, body, component(s), and equipment they provide. Any transmission repair caused by an alteration(s) made to the Allison transmission or the vehicle which allows the transmission to be installed or operated outside of the limits defined in the appropriate Allison Installation Guideline is solely the responsibility of the entity making the alteration(s).
- **DAMAGE CAUSED by LACK of MAINTENANCE or by the USE of TRANSMISSION FLUIDS NOT RECOMMENDED in the OPERATOR'S MANUAL —** Defects and damage caused by any of the following are not covered:
  - — Failure to follow the recommendations of the maintenance schedule intervals applicable to the transmission;
  - — Failure to use transmission fluids or maintain transmission fluid levels recommended in the Operator's Manual.
- **MAINTENANCE —** Normal maintenance (such as replacement of filters, screens, and transmission fluid) is not covered and is the owner's responsibility.
- **REPAIRS by UNAUTHORIZED DEALERS —** Defects and damage caused by a service outlet that is not an authorized Allison Transmission Distributor or Dealer are not covered.
- **USE of OTHER THAN GENUINE ALLISON TRANSMISSION PARTS —** Defects and damage caused by the use of parts that are not genuine Allison Transmission parts are not covered.
- **EXTRA EXPENSES —** Economic loss and extra expenses are not covered. Examples include but are not limited to: loss of vehicle use; inconvenience; storage; payment for loss of time or pay; vehicle rental expense; lodging; meals; or other travel costs.
- **"DENIED PARTY" OWNERSHIP —** Warranty repair parts and labor costs are not reimbursed to any participating or non-participating OEMs, dealers or distributors who perform warranty work for, or on behalf of, end users identified by the United States as being a "denied party" or who are citizens of sanctioned or embargoed countries as defined by the U.S. Department of Treasury Office of Foreign Assets Control. Furthermore, warranty reimbursements are not guaranteed if the reimbursement would be contrary to any United States export control laws or regulations as defined by the U.S. Department of Commerce, the U.S. Department of State, or the U.S. Department of Treasury.

OTHER TERMS APPLICABLE TO CONSUMERS AS DEFINED by the MAGNUSON-MOSS WARRANTY ACT

This warranty gives you specific legal rights and you may also have other rights which vary from state to state.

Allison Transmission does not authorize any person to create for it any other obligation or liability in connection with these transmissions. **ANY IMPLIED WARRANTY OF MERCHANTABILITY OR FITNESS FOR A PARTICULAR PURPOSE APPLICABLE TO THESE TRANSMISSIONS IS LIMITED IN DURATION TO THE DURATION OF THIS WRITTEN WARRANTY. PERFORMANCE OF REPAIRS AND NEEDED ADJUSTMENTS IS THE EXCLUSIVE REMEDY UNDER THIS WRITTEN WARRANTY OR ANY IMPLIED WARRANTY. ALLISON TRANSMISSION SHALL NOT BE LIABLE FOR INCIDENTAL OR CONSEQUENTIAL DAMAGES (SUCH AS, BUT NOT LIMITED TO, LOST WAGES OR VEHICLE RENTAL EXPENSES) RESULTING FROM BREACH OF THIS WRITTEN WARRANTY OR ANY IMPLIED WARRANTY.****

** Some states do not allow limitations on how long an implied warranty will last or the exclusion or limitation of incidental or consequential damages, so the above limitations or exclusions may not apply to you.

OTHER TERMS APPLICABLE TO OTHER END-USERS

THIS WARRANTY IS THE ONLY WARRANTY APPLICABLE TO THE ALLISON TRANSMISSION MODELS LISTED ABOVE AND IS EXPRESSLY IN LIEU OF ANY OTHER WARRANTIES, EXPRESS OR IMPLIED, INCLUDING ANY IMPLIED WARRANTY OF MERCHANTABILITY OR FITNESS FOR A PARTICULAR PURPOSE. ALLISON TRANSMISSION DOES NOT AUTHORIZE ANY PERSON TO CREATE FOR IT ANY OTHER OBLIGATION OR LIABILITY IN CONNECTION WITH SUCH TRANSMISSIONS. ALLISON TRANSMISSION SHALL NOT BE LIABLE FOR INCIDENTAL OR CONSEQUENTIAL DAMAGES RESULTING FROM BREACH OF THIS WARRANTY OR ANY IMPLIED WARRANTY.

QUESTIONS

If you have any questions regarding this warranty or the performance of warranty obligations, you may contact any Allison Transmission Distributor or Dealer or write to:

Allison Transmission, Inc.
P.O. Box 894
Indianapolis, IN 46206-0894
Attention: Warranty Administration PF-9

Form SE0616EN (201009)

Fire and Rescue Apparatus

Five (5) Year Material and Workmanship - Transmission Oil Cooler
Three (3) Year Collateral Damage Coverage

Limited Warranty

1. LIMITED WARRANTY

Subject to the limitations and exclusions set forth below, Pierce Manufacturing provides the following warranty to the Buyer:

Coverage:	**The transmission cooler shall be free from component or structural failures caused by defects in material and/or workmanship. Collateral damage up to $10,000 per occurrence is available for the first three (3) years.**
Warranty Begins:	**The date of delivery to the first retail purchaser.**
Warranty Period Ends After:	**Five (5) Years on Oil Cooler and three (3) years on collateral damage coverage**
Conditions and Exclusions: **See Also Paragraphs 2 thru 4**	**This warranty does not cover repair due to accidents, misuse, and excessive vibration, flying debris, storage damage (freezing), negligence or modification. This warranty is void if any modification or repairs are performed without authorization. This also voids any future warranty.** **This warranty does not cover cost of maintenance or repairs due to lack of required maintenance services as recommended. Performance of the required maintenance and use of proper fluids are the responsibility of the owner.** **Towing is covered to the nearest distributor or authorized dealer only when necessary to prevent further damage to your transmission.** **Labor costs for the removal and reinstallation of goods may be covered when necessary to make repairs. Please contact your OEM for authorization.** **Replacement of cooler during the warranty period is limited to 100% of reasonable labor costs up to a maximum of $700 to remove, replace, or repair the oil cooler.**

This limited warranty shall apply only if the product is properly maintained in accordance with Pierce's maintenance instructions and manuals and is used in service which is normal to the particular model. Normal service means service which does not subject the product to stresses or impacts greater than normally result from careful use. If the Buyer discovers a defect or nonconformity, it must notify Pierce in writing within thirty (30) days after the date of discovery, but in any event prior to the expiration of the warranty period. THIS LIMITED WARRANTY MAY NOT BE ASSIGNED OR OTHERWISE TRANSFERRED BY THE BUYER TO ANY SUBSEQUENT USER OR PURCHASER OR TO ANY OTHER PERSON OR ENTITY.

Notwithstanding anything to the contrary herein, Pierce makes no warranty whatsoever as to:

(a) any integral parts, components, attachments or trade accessories of or to the product that are not manufactured by Pierce, including but not limited to engines, transmissions, drivelines, axles, water pumps and generators; with respect to all such parts, components, attachments and accessories, Pierce shall assign to Buyer the applicable warranties, if any, made by the respective manufacturers thereof;

(b) any vehicle, chassis, or component, part, attachment or accessory damaged by misuse, neglect, fire, exposure to severe environmental or chemical conditions, acidic environment, improper maintenance, accident, crash, or force majeure such as natural disaster, lightning, earthquake, windstorm, hail, flood, war or riot;

(c) any vehicle, chassis or component, part, attachment or accessory that has been repaired, altered or assembled in any way by any person or entity other than Pierce which, in the sole judgment of Pierce, adversely affects the performance, stability or purpose for which it was manufactured; or

(d) products or parts which may in the ordinary course wear out and have to be replaced during the warranty period, including, but not limited to, tires, fluids, gaskets and light bulbs. Pierce assumes no responsibility for the assembly of its parts or subassemblies into finishing products or vehicles unless the assembly is performed by Pierce.

The original purchaser may void this warranty in part or in its entirety if the product is repaired or replaced (a) without prior written approval of the Pierce Customer Service Department; or (b) at a facility which has not been approved by Pierce as to technical capability. Any repairs, modifications, alterations or aftermarket parts added after manufacture without the authorization of Pierce may void this warranty.

2. DISCLAIMERS OF WARRANTIES

THE WARRANTY SET FORTH IN PARAGRAPH 1 IS THE SOLE AND EXCLUSIVE WARRANTY GIVEN BY PIERCE. PIERCE HEREBY DISCLAIMS AND EXCLUDES ALL OTHER WARRANTIES, WHETHER EXPRESS, IMPLIED OR STATUTORY, INCLUDING WITHOUT LIMITATION ANY WARRANTY OF MERCHANTABILITY, ANY WARRANTY OF FITNESS FOR A PARTICULAR PURPOSE, AND ANY WARRANTIES ARISING FROM COURSE OF DEALING OR USAGE OF TRADE.

3. BUYER'S EXCLUSIVE REMEDY.

If the product fails to conform to the warranty set forth in paragraph 1 during the warranty period, and such nonconformity is not due to misuse, neglect, accident or improper maintenance, Buyer must notify Pierce within the time period specified in paragraph 1, and shall make the product available for inspection by Pierce or its designated agent. At the request of Pierce, any allegedly defective product shall be returned to Pierce by Buyer for examination and/or repair. Buyer shall be responsible for the cost of such transportation, and for risk of loss of or damage to the product during transportation. Within a reasonable time, Pierce shall repair or replace (at Pierce's option and expense) any nonconforming or defective parts. Repair or replacement shall be made only by a facility approved in advance in writing by Pierce. THIS REMEDY SHALL BE THE EXCLUSIVE AND SOLE REMEDY FOR ANY BREACH OF WARRANTY.

4. EXCLUSION OF CONSEQUENTIAL AND INCIDENTAL DAMAGES.

Notwithstanding anything to the contrary herein or in any agreement between Pierce and Buyer, IN NO EVENT SHALL PIERCE BE LIABLE FOR ANY CONSEQUENTIAL, INCIDENTAL, SPECIAL, INDIRECT, OR PUNITIVE DAMAGES WHATSOEVER, WHETHER ARISING OUT OF BREACH OF CONTRACT, WARRANTY, TORT (INCLUDING NEGLIGENCE AND STRICT LIABILITY) OR OTHER THEORY OF LAW OR EQUITY, WITH RESPECT TO VEHICLES OR OTHER PRODUCTS SOLD BY PIERCE, OR THEIR OPERATION OR FAILURE TO OPERATE, OR ANY DEFECTS THEREIN, OR ANY UNDERTAKINGS, ACTS OR OMISSIONS RELATED THERETO, REGARDLESS OF WHETHER PIERCE HAS BEEN INFORMED OF THE POSSIBILITY OF ANY SUCH DAMAGES. Without limiting the generality of the foregoing, Pierce specifically disclaims any liability for property or personal injury damages, penalties, damages for lost profits or revenues, loss of vehicles or products or any associated equipment, cost of substitute vehicles or products, down-time, delay damages, any other types of economic loss, or for any claims by any third party for any such damages.

Note: Any Surety Bond, if a part of the sale of the vehicle as to which this limited warranty is provided, applies only to this Pierce Basic One Year Limited Warranty for such vehicle, and not to other warranties made by Pierce in a separate document (if any) or to the warranties (if any) made by any manufacturer (other than Pierce) of any part, component, attachment or accessory that is incorporated into or attached to the vehicle.

UNITED PLASTIC FABRICATING

Limited Lifetime Warranty

Effective as of January 1, 2024

1. General. United Plastic Fabricating, Inc. (the "Company") warrants to the owner (the "Owner") that the products set forth on Exhibit A, attached hereto (the "Product") will be reasonably free from defects in materials and workmanship for the service life of the Product. This Limited Lifetime Warranty (the "Warranty") only applies to Company Products that are: (a) owned by a federal, state, county or local government, a volunteer fire department or dedicated commercial fire service operation; (b) continuously and actively used in emergency response and/or fire suppression vehicles; and (c) used, stored, handled and installed in the manner recommended by Company.

2. Warranty Obligations. Subject to the exclusions and limitations set forth in this Warranty, Company will, at its option, repair or offer a one (1) time replacement of the Product without charge, if the Product fails or does not perform as warranted during the warranty period due to a manufacturing defect or a defect in materials. Repair or replacement shall include reasonable labor charges necessary to repair or replace the defective Product but shall not include: (a) the costs associated with removal of the Product from the vehicle or the cost to otherwise provide access to the Product in the vehicle; (b) the cost associated with any required upgrades the vehicle (including, without limitation, upgrades required to strengthen the vehicle's frame); or (c) travel costs, except as provided by Section 3. Company's obligation as to repair or replacement shall further be limited to repair or replacement with the models of the Product that are available at the time of the repair or replacement, and shall be limited to the repair or replacement of only the specific Product that fails due to a manufacturing defect. In the event a Product becomes unavailable or cannot be supplied by Company for any reason a substitute Product of equal quality and functionality of the subject Product may be substituted by Company. Any repaired Product shall remain subject to this Warranty and any repair shall not extend the warranty period in any manner or start a new warranty period. Any Product that is replaced by Company shall be excluded from this Warranty. In no event shall Company be required to expend, in any one (1) or series of expenditures, more than the purchase price of the Product to repair or replace a defective Product. Amounts expended by Company shall include all amounts paid by Company in connection the repair or replacement, including without limitation, amounts paid to third-parties, material costs, incidental costs and travel costs (except as provided by Section 3).

3. Travel; Expenses; Product Access. Company shall be responsible for any travel costs incurred to repair or replace the Product provided that: (a) the Product is located in the continental United States or Canada; and (ii) the warranty claim is initiated prior to the date on which NFPA 1912 Standards (Annex D) recommends replacement of the Product. All other travel costs incurred by Company or its agents to repair or replace the Product shall be the responsibility of the party asserting the warranty claim. Company reserves the right to require, as a condition to undertaking any repair or replacement: (y) pre-payment of its anticipated travel costs; and (z) satisfactory arraignments concerning scheduling and access to the Product. If the subject Product is located in an area of the world considered, in Company's sole discretion, to be unsafe Company may refuse to process the claim or require relocation of the Product, at no expense to Company, to an area where such repairs can be performed safely by Company or its agents. In the event Company or Company's agents are dispatched to repair or replace a defective Product and the vehicle in which the Product has been installed is not available or the Product is not readily accessible, for any reason, Company or Company's agents, as the case may be, shall be immediately reimbursed for all expenses incurred therewith.

4. Exclusions: Products must be stored, handled, installed, used and maintained in accordance with instructions provided by Company, and this Warranty is conditioned upon compliance with all such instructions. This Warranty does not cover defects caused by: (a) improper installation; (b) modification, alteration or repair of the Product by any unauthorized third-party; (c) misuse, including, without limitation, improper

storage or handling of the Product (e.g. excessive exposure to UV rays); chemical abuse (e.g. harsh cleansers and solvents), thermal abuse or shock (e.g. excessive heat or cold); (d) damage not resulting from manufacturing defects that occur while the Product is not in Company's possession (e.g. accidents); or (e) unreasonable or unintended use of the Product. Copies of the Company's operation and maintenance instructions are available on the Company's website https://www.unitedplastic.com/upf-documents/

5. Disclaimer. THE WARRANTIES SET FORTH HEREIN ARE THE ONLY WARRANTIES MADE BY COMPANY IN CONNECTION WITH THE PRODUCT. COMPANY CAN NOT AND DOES NOT MAKE ANY IMPLIED OR EXPRESS WARRANTIES WITH RESPECT TO THE PRODUCT, AND DISCLAIMS ALL OTHER WARRANTIES, INCLUDING, BUT NOT LIMITED TO, ANY WARRANTY OF MERCHANTABILITY OR FITNESS FOR A PARTICULAR PURPOSE. PRODUCTS SOLD BY COMPANY ARE SOLD ONLY TO THE SPECIFICATIONS SPECIFICALLY SET FORTH BY COMPANY IN WRITING. OTHER THAN THE LIMITED WARRANTY SET FORTH HEREIN, COMPANY MAKES NO OTHER WARRANTIES, EXPRESS OR IMPLIED. COMPANY'S SOLE OBLIGATION UNDER THIS WARRANTY SHALL BE REPAIR OR REPLACEMENT OF NON-CONFORMING PRODUCT. BUYER ASSUMES ALL RISK WHATSOEVER AS TO THE RESULT OF THE USE OF THE PRODUCT PURCHASED, WHETHER USED SINGULARLY OR IN COMBINATION WITH ANY OTHER PRODUCTS OR SUBSTANCES.

6. Limitation of Liability. NO CLAIM BY OWNER OF ANY KIND, INCLUDING CLAIMS FOR INDEMNIFICATION, SHALL BE GREATER IN AMOUNT THAN THE PURCHASE PRICE OF THE PRODUCT IN RESPECT TO WHICH DAMAGES ARE CLAIMED. IN NO EVENT SHALL COMPANY BE LIABLE TO OWNER IN TORT, CONTRACT OR OTHERWISE, FOR ANY SPECIAL, INDIRECT, INCIDENTAL, CONSEQUENTIAL (INCLUDING, WITHOUT LIMITATION, ANY OBLIGATION OF COMPANY TO REPAIR OR REPLACE ANY CHASSIS, SUB-FRAMES, BODIES, VALVES, DUMPS, HOSES, PRESSURE VACUUM VENTS OR OTHER SIMILAR COMPONENTS), RELIANCE, STATUTORY, SPECIAL, PUNITIVE OR EXEMPLARY DAMAGES, INCLUDING, BUT NOT LIMITED TO, LOST PROFITS, LOSS OF USE, LOSS OF TIME, LOSS OF REVENUES, INCONVENIENCE, LOSS BUSINESS OPPORTUNITIES, OR DAMAGE TO GOOD WILL OR REPUTATION, EVEN IF ADVISED OF THE POSSIBILITY OF SUCH DAMAGES OR SUCH DAMAGES COULD HAVE BEEN REASONABLY FORESEEN, IN CONNECTION WITH, ARISING OUT OF, OR AS A RESULT OF, THE SALE, DELIVERY, SERVICING, USE OR LOSS OF USE OF THE PRODUCTS SOLD HEREUNDER, OR FOR ANY LIABILITY OF BUYER TO ANY THIRD PARTY WITH RESPECT THERETO.

7. Reformation. If any term or provision of this Warranty shall be held or deemed to be, or shall in fact be, invalid, inoperative, illegal or unenforceable as applied in any case or in any jurisdiction or jurisdictions because of the conflicting nature of any provision with any constitution or statute or rule of public policy or for any other reason, then: (a) such circumstance shall not have the effect of rendering the provision or provisions in question invalid, inoperative, illegal or unenforceable in any other jurisdiction or in any other case or circumstance or of rendering any other provision or provisions herein contained invalid, inoperative, illegal or unenforceable to the extent that such other provisions are not themselves actually in conflict with such constitution, statute or rule of public policy; and (b) any such invalid, inoperative, illegal or unenforceable provision shall be reformed and construed in any such jurisdiction or case so that such provision would be valid, operative and enforceable to the maximum extent permitted in such jurisdiction or case.

8. Headings. The headings contained herein are for convenience and reference only, and shall be given no effect in the interpretation of any term or condition of this Warranty.

9. Submitting a Warranty Claim. To request coverage under this Warranty you must submit a claim through Company's_website:
https://www.unitedplastic.com/contact/product-support/

10. Transferability. This Warranty is transferable and entitles the transferee to coverage for the remainder of the original warranty period.

11. Modification. This Warranty may be modified (a) as set forth on a binding sales order for the Product or (b) by a written agreement between Company and the Owner.

Exhibit A

Covered Product List

- Poly-Tanks®
- PolySide® Wetside Tanks
- Defender™ Skid Tanks
- Ellip-T™ Elliptical Tanks
- ARFF Tanks

Fire and Rescue Apparatus

Ten (10) Year Structural Integrity
Apparatus Body

Limited Warranty

1. LIMITED WARRANTY

Subject to the limitations and exclusions set forth below, Pierce Manufacturing provides the following warranty to the Buyer:

Coverage:	**The apparatus body shall be free from structural failures caused by defects in material and workmanship**
Warranty Begins:	**The date of the original purchase invoice (issued when the product ships from the factory).**
Warranty Period Ends After:	**Ten (10) Years - or - 100,000 Miles**
Conditions and Exclusions: **See Also Paragraphs 2 thru 4**	**This warranty applies only to the body tubular support and mounting structures and other structural components of the body of the vehicle model, as identified in the Pierce specifications for the Fire and Rescue Apparatus.** **This warranty does not apply to damage caused by corrosion.**

This limited warranty shall apply only if the product is properly maintained in accordance with Pierce's maintenance instructions and manuals and is used in service which is normal to the particular model. Normal service means service which does not subject the product to stresses or impacts greater than normally result from careful use. If the Buyer discovers a defect or nonconformity, it must notify Pierce in writing within thirty (30) days after the date of discovery, but in any event prior to the expiration of the warranty period. THIS LIMITED WARRANTY MAY NOT BE ASSIGNED OR OTHERWISE TRANSFERRED BY THE BUYER TO ANY SUBSEQUENT USER OR PURCHASER OR TO ANY OTHER PERSON OR ENTITY.

Notwithstanding anything to the contrary herein, Pierce makes no warranty whatsoever as to:

(a) any integral parts, components, attachments or trade accessories of or to the product that are not manufactured by Pierce, including but not limited to engines, transmissions, drivelines, axles, water pumps and generators; with respect to all such parts, components, attachments and accessories, Pierce shall assign to Buyer the applicable warranties, if any, made by the respective manufacturers thereof;

(b) any vehicle, chassis, or component, part, attachment or accessory damaged by misuse, neglect, fire, exposure to severe environmental or chemical conditions, acidic environment, improper maintenance, accident, crash, or force majeure such as natural disaster, lightning, earthquake, windstorm, hail, flood, war or riot;

(c) any vehicle, chassis or component, part, attachment or accessory that has been repaired, altered or assembled in any way by any person or entity other than Pierce which, in the sole judgment of Pierce, adversely affects the performance, stability or purpose for which it was manufactured; or

(d) products or parts which may in the ordinary course wear out and have to be replaced during the warranty period, including, but not limited to, tires, fluids, gaskets and light bulbs. Pierce assumes no responsibility for the assembly of its parts or subassemblies into finishing products or vehicles unless the assembly is performed by Pierce.

The original purchaser may void this warranty in part or in its entirety if the product is repaired or replaced (a) without prior written approval of the Pierce Customer Service Department; or (b) at a facility which has not been approved by Pierce as to technical capability. Any repairs, modifications, alterations or aftermarket parts added after manufacture without the authorization of Pierce may void this warranty.

2. DISCLAIMERS OF WARRANTIES

THE WARRANTY SET FORTH IN PARAGRAPH 1 IS THE SOLE AND EXCLUSIVE WARRANTY GIVEN BY PIERCE. PIERCE HEREBY DISCLAIMS AND EXCLUDES ALL OTHER WARRANTIES, WHETHER EXPRESS, IMPLIED OR STATUTORY, INCLUDING WITHOUT LIMITATION ANY WARRANTY OF MERCHANTABILITY, ANY WARRANTY OF FITNESS FOR A PARTICULAR PURPOSE, AND ANY WARRANTIES ARISING FROM COURSE OF DEALING OR USAGE OF TRADE.

3. BUYER'S EXCLUSIVE REMEDY.

If the product fails to conform to the warranty set forth in paragraph 1 during the warranty period, and such nonconformity is not due to misuse, neglect, accident or improper maintenance, Buyer must notify Pierce within the time period specified in paragraph 1, and shall make the product available for inspection by Pierce or its designated agent. At the request of Pierce, any allegedly defective product shall be returned to Pierce by Buyer for examination and/or repair. Buyer shall be responsible for the cost of such transportation, and for risk of loss of or damage to the product during transportation. Within a reasonable time, Pierce shall repair or replace (at Pierce's option and expense) any nonconforming or defective parts. Repair or replacement shall be made only by a facility approved in advance in writing by Pierce. THIS REMEDY SHALL BE THE EXCLUSIVE AND SOLE REMEDY FOR ANY BREACH OF WARRANTY.

4. EXCLUSION OF CONSEQUENTIAL AND INCIDENTAL DAMAGES.

Notwithstanding anything to the contrary herein or in any agreement between Pierce and Buyer, IN NO EVENT SHALL PIERCE BE LIABLE FOR ANY CONSEQUENTIAL, INCIDENTAL, SPECIAL, INDIRECT, OR PUNITIVE DAMAGES WHATSOEVER, WHETHER ARISING OUT OF BREACH OF CONTRACT, WARRANTY, TORT (INCLUDING NEGLIGENCE AND STRICT LIABILITY) OR OTHER THEORY OF LAW OR EQUITY, WITH RESPECT TO VEHICLES OR OTHER PRODUCTS SOLD BY PIERCE, OR THEIR OPERATION OR FAILURE TO OPERATE, OR ANY DEFECTS THEREIN, OR ANY UNDERTAKINGS, ACTS OR OMISSIONS RELATED THERETO, REGARDLESS OF WHETHER PIERCE HAS BEEN INFORMED OF THE POSSIBILITY OF ANY SUCH DAMAGES. Without limiting the generality of the foregoing, Pierce specifically disclaims any liability for property or personal injury damages, penalties, damages for lost profits or revenues, loss of vehicles or products or any associated equipment, cost of substitute vehicles or products, down-time, delay damages, any other types of economic loss, or for any claims by any third party for any such damages.

Note: Any Surety Bond, if a part of the sale of the vehicle as to which this limited warranty is provided, applies only to this Pierce Basic One Year Limited Warranty for such vehicle, and not to other warranties made by Pierce in a separate document (if any) or to the warranties (if any) made by any manufacturer (other than Pierce) of any part, component, attachment or accessory that is incorporated into or attached to the vehicle.

Warranty Statement

Effective May 30, 2020

Subject to the following general and specific terms and conditions, Hale Products, Inc. ("Seller") hereby warrants to the original Purchaser1 that Products sold under Hale and Class 1 brands will be free of defects in material and workmanship for the applicable Warranty Period. General terms and conditions applicable for all Products are set forth under the heading **General Terms and Conditions** below. Product specific terms and conditions, including Warranty Periods and Warranty Coverages, are set forth in the Tables following the **General Terms and Conditions.**

General Terms and Conditions

The following limitations, exclusions, procedures, and other terms and conditions shall apply for all Products: Warranty is voided if:

- Product is used for an application, with products or in a manner other than the application, products, and manner for which such Product is designed and intended
- Product is subjected to a use, service, condition or environment other than a use, service, condition or environment for which such Product is designed and intended
- Product is not properly installed
- Product is not properly tested and maintained in accordance with Seller's product manuals and supplemental instructions and guidelines, applicable industry standards and guidelines, and applicable legal and regulatory requirements
- Product is altered, modified, serviced (except routine maintenance performed in accordance with Seller's instruction manual for Product and Industry accepted standards and guidelines), or repaired by a person other than Seller or a person authorized by Seller to make such alteration or modification or perform such service or repair
- Seller is not paid the full amount of the purchase price for Product when due.

No Warranty covers:

- Ordinary wear and tear
- Failure due to compliance with a specification or design provided or required by Purchaser
- Failure due to improper operation, excess pressure, excess voltage or other similar cause
- Failure due to operator error
- Damage during or after shipment and failure attributable thereto or resulting there from
- Failure attributable to or resulting from the failure or substandard, inadequate or improper performance of any part, component or equipment not supplied by Seller
- Failure attributable to or resulting from the failure or substandard, inadequate or improper performance of any third party (e.g., not Hale or Class 1 brand) part, component, Product or equipment, whether or not combined, packaged, incorporated, installed or used with a Hale or Class 1 brand part, component, Product or equipment.

Seller shall have no obligation under any Warranty unless Purchaser promptly notifies Seller of the failure giving rise to the Warranty claim, such notice is received by Seller within the applicable Warranty Period, and Seller is provided with such information, data and records (including, but not limited to, in service date, run hours, and service and repair records) as Seller may reasonably request in evaluating the Warranty claim. The notice of failure must be given in writing, identify the Product claimed to be defective (including serial number, if any), and describe in reasonable detail the circumstances surrounding the failure.

Repaired Product and replacement Product shall be warranted only for the remainder of the original Warranty Period.

[1] *The "original Purchaser" is the original purchaser from Hale Products, whether the original purchaser is a distributor, dealer or other reseller, an OEM, or an end user.*

Seller reserves the right to use reconditioned parts for Warranty repairs and to use reconditioned
Products for Warranty replacements

Hale Products
607 NW 27th Avenue
Ocala, FL 34475
Haleproducts.com

Trusted Solutions, Improving Lives

Seller shall have the right to physically inspect Product claimed to be defective. If requested by Seller, Purchaser shall deliver the Product claimed to be defective to Seller at its manufacturing facility or to another party or location designated by Seller. In such event, Seller shall issue to Purchaser a Return Materials Authorization (RMA) for the Product to be delivered. The Product must be delivered to Seller within 30 days of issuance of the RMA. The RMA number must be included with the Product when delivered to Seller. Failure to make timely delivery to Seller of the Product claimed to be defective shall void any Warranty.

Purchaser or its customer shall be responsible for all freight and shipping charges in connection with the delivery of Product claimed to be defective to Seller at its manufacturing facility or to another party or location designated by Seller. Product claimed to be defective must be shipped by Purchaser freight prepaid, and Purchaser shall bear all risk of loss or damage during shipment.

Repaired and replacement Product and parts will be shipped to Purchaser freight collect, unless a determination is made prior to shipment that the warranty claim is valid, in which case Product and parts will be shipped to Purchaser freight prepaid from Supplier. Repaired or replacement Product will be shipped back to purchaser via UPS ground or IDEX approved standard freight. If Purchaser requires expedited UPS shipment, Purchaser will cover the difference between ground and service selected costs. Purchaser shall bear all risk of loss or damage for all freight collect shipments.

When a warranty claim is confirmed by Hale's Quality department, Hale will issue a credit for freight costs under the following conditions:

- Product was shipped by Purchaser freight prepaid to Supplier. Purchaser to provide a copy of paid freight bill upon Hale's request.
- Repaired or replacement Product was shipped to Purchaser freight collect. If Purchaser required expedited shipment, the difference between ground and expedited service costs will be deducted from total credit.

If requested to do so by Purchaser, Seller may, at its sole option and in its sole discretion, supply a replacement Product or part to Purchaser prior to making a final determination as to whether Warranty Coverage is available. If Seller ultimately determines that no Warranty Coverage is available for the Product claimed to be defective, whether the determination is based on the Warranty being voided, the Product failure being due to a cause not covered by the Warranty, the failure to make a timely and proper Warranty claim, or otherwise, Purchaser or its customer will be required to purchase the replacement Product or part that has been supplied to it by Seller at the price at which Purchaser is then entitled to purchase such Product or part under the Supply Agreement.

If Seller ultimately determines that no Warranty Coverage is available for a Product claimed to be defective, whether the determination is based on the Warranty being voided, the Product failure being due to a cause not covered by the Warranty, the failure to make a timely and proper Warranty claim, or otherwise, Purchaser shall have the option of either (i) having the Product returned to it freight collect, without repair or replacement, or (ii) if Seller determines that the Product is repairable, have the Product repaired by Seller or another party designated by it on a time and materials basis at Seller's then current standard charges for non-warranty repairs and then returned to Purchaser freight collect.

SELLER'S WARRANTY AS SET FORTH HEREIN IS SELLER'S SOLE AND EXCLUSIVE WARRANTY AND IS IN LIEU OF ALL OTHER WARRANTIES, EXPRESS OR IMPLIED, INCLUDING, BUT NOT LIMITED TO, ALL WARRANTIES OF MERCHANTABILITY, FITNESS FOR A PARTICULAR PURPOSE AND NON-INFRINGMENT ALL OF WHICH OTHER WARRANTIES ARE EXPRESSLY EXCLUDED.

THE RIGHTS AND REMEDIES SET FORTH HEREIN ARE THE SOLE AND EXCLUSIVE RIGHTS AND REMEDIES AGAINST SELLER. EXCEPT FOR THE SPECIFIC LIABILITIES AND OBLIGATIONS

PROVIDED HEREIN, SELLER SHALL HAVE NO LIABILITY OR OBLIGATION WITH RESPECT TO ANY PRODUCT CLAIMED TO BE DEFECTIVE IN ANY MANNER.

UNDER NO CIRCUMSTANCES SHALL SELLER BE LIABLE FOR SPECIAL, INCIDENTAL, INDIRECT, CONSEQUENTIAL OR PUNITIVE DAMAGES OF ANY KIND, INCLUDING, BUT NOT LIMITED TO, LOST OR UNREALIZED SALES, REVENUES, PROFITS, INCOME, COST SAVINGS OR BUSINESS, LOST OR UNREALIZED CONTRACTS, LOSS OF GOODWILL, DAMAGE TO REPUTATION, LOSS OF PROPERTY, LOSS OF INFORMATION OR DATA, LOSS OF PRODUCTION, DOWNTIME, OR INCREASED COSTS, IN CONNECTION WITH ANY PRODUCT, EVEN IF SELLER IS ADVISED OR PLACED ON NOTICE OF THE POSSIBILITY OF SUCH DAMAGES AND NOTWITHSTANDING THE FAILURE OF ANY ESSENTIAL PURPOSE OF ANY PRODUCT.

Hale Products
607 NW 27th Avenue
Ocala, FL 34475
Haleproducts.com

Warranty Statement

Effective May 30, 2020

Hale Products, Inc.

Product Specific Warranty Terms and Conditions

Product*		Warranty Period	Coverage**
Pumps Mid-Ship, Rear Mount, and Booster (Excludes all Engine Driven Units)	Non-Marine Fire Service Applications	Earlier of (i) 5 years from in service date of vehicle or equipment in which Product is initially installed, or (ii) 5-1/2 years from date of shipment of Product to original Purchaser. Labor is only covered for the first two (2) years of this warranty coverage.	Repair or replacement of Product that Seller determines failed during Warranty Period due to a defect in material or workmanship.
			At time pump is ordered, original Purchaser may take Standard Warranty at no charge or purchase Extended Warranty for an additional charge which will be quoted by Seller at original purchaser's request at time of order.
			Under Standard Warranty, Seller will cover parts and labor for first 2 years of Warranty Period and parts only (no labor) for remainder of the Warranty Period.
			Under Extended Warranty (if purchased by original Purchaser), Seller will cover parts and labor for the full Warranty Period.
			When labor is covered, original Purchaser will be reimbursed at Seller's then current standard labor hours and rates for labor to make repair (if not repaired by Seller) and to remove defective Product and re-install repaired or replacement Product. Seller's approval of repair estimate is required prior to performance of repair work. If applicable, actual mileage will be reimbursed at Seller's then current mileage reimbursement rate. See the Hale Pump and Pump Accessories Labor Warranty Guide for details on issues covered and fees paid.
	Marine and Other Application	Earlier of (i) 2 years from the date of shipment of Product to original Purchaser, or (ii) 2,000 run hours.	Repair or replacement of Product that Seller determines failed during Warranty Period due to a defect in material or workmanship. No labor is included.
Engine Driven Units (Excluding Engines ***)	Pump Ends Backpacks Floats	If not used for rental or contracting, 2 years from the date of shipment of Product to original Purchaser.	Repair or replacement of Product that Seller determines failed during Warranty Period due to a defect in material or workmanship. Repair labor is included but any other labor (including removal and re- installation) and mileage are excluded. Original Purchaser will be reimbursed at Seller's then current standard labor hours and rates for labor to make repair (if not repaired by Seller). Seller's approval of repair estimate is required prior to performance of repair work.
		If not used for rental or contracting, 2 years from the date of shipment of Product to original Purchaser.	Repair or replacement of Product that Seller determines failed during Warranty Period due to a defect in material or workmanship. No labor is included.
	HP Portables	If not used for rental or contracting, 3 years from the date of shipment of Product to original Purchaser	Repair or replacement of Product that Seller determines failed during Warranty Period due to a defect in material or workmanship. No labor is included. See Hale Portable Pump Labor Warranty Guide for details on issues covered and fees paid
		If used for rental or contracting, earlier of (i) 6 months from date of shipment to original Purchaser, or (ii) 1,000 run hours.	Repair or replacement of Product that Seller determines failed during Warranty Period due to a defect in material or workmanship. No labor is included.
	Cross-Chassis Skids Trailer Units	Earlier of (i) 12 months from date of shipment to original Purchaser, or (ii) 1,000 run hours.	Repair or replacement of Product that Seller determines failed during Warranty Period due to a defect in material or workmanship. No labor is included.

Hale Products
607 NW 27th Avenue
Ocala, FL 34475
Haleproducts.com

Trusted Solutions, Improving Lives™

Warranty Statement

Effective May 30, 2020

Hale Products, Inc.

Product Specific Warranty Terms and Conditions

Product*		Warranty Period	Coverage**
Pump Modules	Pump Body Weldments, Stainless Manifolds, and Fabricated non-painted or powder coated panels	10 years from the date of shipment of Product to original Purchaser.	Repair or replacement of Product that Seller determines failed (including cracks resulting from stress and rust through of panels) during Warranty Period due to a defect in material or workmanship. No labor is included.
			Pump modules are built to original Purchaser's specification or design. Although individual Hale and Class 1 brand components used for pump modules comply with NFPA standards, pump modules are not NFPA compliant. Original Purchaser is solely responsible for (i) ensuring finished pump houses are NFPA complaint and adhere to industry accepted standards and guidelines, and (ii) supplying manuals that include appropriate directions, instructions and warnings concerning pump house operation.
	Fabricated painted or powdered coated panels	2 years from the date of shipment of Product to original Purchaser	Repair or replacement of Product that Seller determines failed from paint, finish, and corrosion during Warranty Period due to a defect in material or workmanship. No labor is included.
Foam SmartFoam, SmartCAFS, CAFS Systems, SmartATP, and EZ Fill		3 years from the date of shipment to original Purchaser.	Repair or replacement of Product that Seller determines failed during Warranty Period due to a defect in material or workmanship. No labor is included. Datalogger download from Product may be requested to determine cause of defect.
Foam FoamLogix Systems		1 year from the date of shipment to original Purchaser.	Repair or replacement of Product that Seller determines failed during Warranty Period due to a defect in material or workmanship. No labor is included.
Pump Repair & Replacement Parts	Ordered for service and repair	90 days from date of shipment of Product to original Purchaser.	Repair or replacement of Product that Seller determines failed during Warranty Period due to a defect in material or workmanship. No labor is included.
Pressure Gauges		3 years from date of shipment of Product to the original Purchaser.	Repair or replacement of Product that Seller determines failed during Warranty Period due to a defect in material or workmanship. No labor is included.
Plumbing		2 years from date of shipment of Product to original Purchaser.	Repair or replacement of Product that Seller determines failed during Warranty Period due to a defect in material or workmanship. No labor is included.
Valves	Akron Valve	10 years from date of shipment of Product to original Purchaser on everything except seal. No warranty on seal.	Repair or replacement of Product that Seller determines failed during Warranty Period due to a defect in material or workmanship. No labor is included.
	Class 1 Valve	10 years from date of shipment of Product to original Purchaser on everything except seal. No warranty on seal.	Repair or replacement of Product that Seller determines failed during Warranty Period due to a defect in material or workmanship. No labor is included.
	Hale Valve	10 years from date of shipment of Product to original Purchaser on everything except seal. No warranty on seal.	Repair or replacement of Product that Seller determines failed during Warranty Period due to a defect in material or workmanship. No labor is included.

Hale Products
607 NW 27th Avenue
Ocala, FL 34475
Haleproducts.com

Trusted Solutions, Improving Lives

Warranty Statement

Effective May 30, 2020

Hale Products, Inc.

Product Specific Warranty Terms and Conditions

Product*		Warranty Period	Coverage**
	SVS Torrent Valve	10 years from date of shipment of Product to original Purchaser on everything except seal. 2 years from date of shipment of Product to original Purchaser on seal.	Repair or replacement of Product that Hale determines failed during Warranty Period due to a defect in material or workmanship. No labor is included.
Electronics		2 years from date of shipment of Product to original Purchaser.	Repair or replacement of Product that Seller determines failed during Warranty Period due to a defect in material or workmanship. No labor is included.
Monitors	Akron	5 years from date of shipment of Product to original Purchaser.	Repair or replacement of Product that Seller determines failed during Warranty Period due to a defect in material or workmanship. No labor is included.
SafeBuy ~~Modules~~ Bundles	QMAX/QMAX-XS Pump Non-Marine Fire Service Applications	Earlier of (i) 8 years from in service date of Safebuy QMAX/QMAX-XS bundle in the vehicle or equipment in which Product is initially installed, or (ii) 8-1/2 years from date of shipment of Product to original Purchaser. This is predicated on the end user supplying Hale with their yearly service and pump testing records by the end of each calendar year.	Repair or replacement of Product that Seller determines failed during Warranty Period due to a defect in material or workmanship. Under Safebuy Warranty, Seller will cover parts and labor for earlier of (i) 8 years from in service date of vehicle or equipment in which Product is initially installed, or (ii) 8-1/2 years from date of shipment of Product to original Purchaser. When labor is covered, original Purchaser will be reimbursed at Seller's then current standard labor hours and service rates for labor to make repair (if not repaired by Seller) and to remove defective Product and re-install repaired or replacement Product. Seller's approval of repair estimate is required prior to performance of repair work. If applicable, actual mileage will be reimbursed at Seller's then current mileage reimbursement rate. See the Hale Pump and Gearbox Labor Warranty Guide for details on issues covered and fee paid.
SAM Bundles-Pump with Loose Valves, Kits or Modules	Pumps-Mid-Ship, Rear Mount, and Booster (Excludes all Engine Driven Units) Non-Marine Fire Service Applications	Earlier of (i) 10 years from in service date of vehicle or equipment in which Product is initially installed, or (ii) 10-1/2 years from date of shipment of Product to original Purchaser.	Repair or replacement of Product that Seller determines failed during Warranty Period due to a defect in material or workmanship. Under SAM Warranty, Seller will cover parts and labor for earlier of (i) 10 years from in service date of vehicle or equipment in which Product is initially installed, or (ii) 10-1/2 years from date of shipment of Product to original Purchaser.

Hale Products
607 NW 27th Avenue
Ocala, FL 34475
Haleproducts.com

Trusted Solutions, Improving Lives™

Warranty Statement

Effective May 30, 2020

Hale Products, Inc.			
Product Specific Warranty Terms and Conditions			
Product*		Warranty Period	Coverage**
SAM Bundles-Pump with Loose Valves, Kits or Modules			When labor is covered, original Purchaser will be reimbursed at Seller's then current standard labor hours and service rates for labor to make repair (if not repaired by Seller) and to remove defective Product and re-install repaired or replacement Product. Seller's approval of repair estimate is required prior to performance of repair work. If applicable, actual mileage will be reimbursed at Seller's then current mileage reimbursement rate. See the Hale Labor Warranty Guides for details on issues covered and fee paid.
	Akron Electric Valve Actuators and Navigator Pros	5 years from date of shipment of Product to original Purchaser.	Repair or replacement of Product that Seller determines failed during Warranty Period due to a defect in material or workmanship. No labor is included.
	Electronics	4 years from date of shipment of Product to original Purchaser.	Repair or replacement of Product that Seller determines failed during Warranty Period due to a defect in material or workmanship. No labor is included.

*When Products are combined to form a module or package, each Product will have its own separate Warranty Period and Warranty Coverage

* * For each Product, Seller will have the option to refund to Purchaser (in cash or by credit) the purchase price Seller was paid for such Product, less depreciation determined on a straight line basis over the Warranty Period, in lieu of repair or replacement (including, when applicable, labor). The decision whether to repair, replace or refund (and, if there is a refund, whether to refund in cash or by credit) shall be made by Seller in its sole discretion.

*** Seller makes no warranty with respect to engines. Any warranty with respect to engines is limited to whatever warranty may be provided by the engine manufacturer.

Hale Products
607 NW 27th Avenue
Ocala, FL 34475
Haleproducts.com

Trusted Solutions, Improving Lives

Fire and Rescue Apparatus

Ten (10) Year Material and Workmanship
Stainless Steel Piping
Limited Warranty

1. LIMITED WARRANTY

Subject to the limitations and exclusions set forth below, Pierce Manufacturing provides the following warranty to the Buyer:

Coverage:	**Stainless steel piping shall be free from structural failures caused by defects in material and workmanship, or perforation caused by corrosion.**
Warranty Begins:	**The date of the original purchase invoice (issued when the product ships from the factory).**
Warranty Period Ends After:	**Ten (10) Years - or - 100,000 Miles**
Conditions and Exclusions: **See Also Paragraphs 2 thru 4**	**Pierce's obligation under this warranty is limited to repairing or replacing without charge, as Pierce may elect, the stainless steel piping or components which Pierce determines to have failed due to defective material and workmanship, or perforation caused by corrosion.** **This warranty does not cover the use of fluoroprotein (FP) type foam. The sodium chloride within FP foam can cause long-term damage to system components if not thoroughly flushed immediately after use.**

This limited warranty shall apply only if the product is properly maintained in accordance with Pierce's maintenance instructions and manuals and is used in service which is normal to the particular model. Normal service means service which does not subject the product to stresses or impacts greater than normally result from careful use. If the Buyer discovers a defect or nonconformity, it must notify Pierce in writing within thirty (30) days after the date of discovery, but in any event prior to the expiration of the warranty period. THIS LIMITED WARRANTY MAY NOT BE ASSIGNED OR OTHERWISE TRANSFERRED BY THE BUYER TO ANY SUBSEQUENT USER OR PURCHASER OR TO ANY OTHER PERSON OR ENTITY.

Notwithstanding anything to the contrary herein, Pierce makes no warranty whatsoever as to:

(a) any integral parts, components, attachments or trade accessories of or to the product that are not manufactured by Pierce, including but not limited to engines, transmissions, drivelines, axles, water pumps and generators; with respect to all such parts, components, attachments and accessories, Pierce shall assign to Buyer the applicable warranties, if any, made by the respective manufacturers thereof;

(b) any vehicle, chassis, or component, part, attachment or accessory damaged by misuse, neglect, fire, exposure to severe environmental or chemical conditions, acidic environment, improper maintenance, accident, crash, or force majeure such as natural disaster, lightning, earthquake, windstorm, hail, flood, war or riot;

(c) any vehicle, chassis or component, part, attachment or accessory that has been repaired, altered or assembled in any way by any person or entity other than Pierce which, in the sole judgment of Pierce, adversely affects the performance, stability or purpose for which it was manufactured; or

(d) products or parts which may in the ordinary course wear out and have to be replaced during the warranty period, including, but not limited to, tires, fluids, gaskets and light bulbs. Pierce assumes no responsibility for the assembly of its parts or subassemblies into finishing products or vehicles unless the assembly is performed by Pierce.

The original purchaser may void this warranty in part or in its entirety if the product is repaired or replaced (a) without prior written approval of the Pierce Customer Service Department; or (b) at a facility which has not been approved by Pierce as to technical capability. Any repairs, modifications, alterations or aftermarket parts added after manufacture without the authorization of Pierce may void this warranty.

2. DISCLAIMERS OF WARRANTIES

THE WARRANTY SET FORTH IN PARAGRAPH 1 IS THE SOLE AND EXCLUSIVE WARRANTY GIVEN BY PIERCE. PIERCE HEREBY DISCLAIMS AND EXCLUDES ALL OTHER WARRANTIES, WHETHER EXPRESS, IMPLIED OR STATUTORY, INCLUDING WITHOUT LIMITATION ANY WARRANTY OF MERCHANTABILITY, ANY WARRANTY OF FITNESS FOR A PARTICULAR PURPOSE, AND ANY WARRANTIES ARISING FROM COURSE OF DEALING OR USAGE OF TRADE.

3. BUYER'S EXCLUSIVE REMEDY.

If the product fails to conform to the warranty set forth in paragraph 1 during the warranty period, and such nonconformity is not due to misuse, neglect, accident or improper maintenance, Buyer must notify Pierce within the time period specified in paragraph 1, and shall make the product available for inspection by Pierce or its designated agent. At the request of Pierce, any allegedly defective product shall be returned to Pierce by Buyer for examination and/or repair. Buyer shall be responsible for the cost of such transportation, and for risk of loss of or damage to the product during transportation. Within a reasonable time, Pierce shall repair or replace (at Pierce's option and expense) any nonconforming or defective parts. Repair or replacement shall be made only by a facility approved in advance in writing by Pierce. THIS REMEDY SHALL BE THE EXCLUSIVE AND SOLE REMEDY FOR ANY BREACH OF WARRANTY.

4. EXCLUSION OF CONSEQUENTIAL AND INCIDENTAL DAMAGES.

Notwithstanding anything to the contrary herein or in any agreement between Pierce and Buyer, IN NO EVENT SHALL PIERCE BE LIABLE FOR ANY CONSEQUENTIAL, INCIDENTAL, SPECIAL, INDIRECT, OR PUNITIVE DAMAGES WHATSOEVER, WHETHER ARISING OUT OF BREACH OF CONTRACT, WARRANTY, TORT (INCLUDING NEGLIGENCE AND STRICT LIABILITY) OR OTHER THEORY OF LAW OR EQUITY, WITH RESPECT TO VEHICLES OR OTHER PRODUCTS SOLD BY PIERCE, OR THEIR OPERATION OR FAILURE TO OPERATE, OR ANY DEFECTS THEREIN, OR ANY UNDERTAKINGS, ACTS OR OMISSIONS RELATED THERETO, REGARDLESS OF WHETHER PIERCE HAS BEEN INFORMED OF THE POSSIBILITY OF ANY SUCH DAMAGES. Without limiting the generality of the foregoing, Pierce specifically disclaims any liability for property or personal injury damages, penalties, damages for lost profits or revenues, loss of vehicles or products or any associated equipment, cost of substitute vehicles or products, down-time, delay damages, any other types of economic loss, or for any claims by any third party for any such damages.

Note: Any Surety Bond, if a part of the sale of the vehicle as to which this limited warranty is provided, applies only to this Pierce Basic One Year Limited Warranty for such vehicle, and not to other warranties made by Pierce in a separate document (if any) or to the warranties (if any) made by any manufacturer (other than Pierce) of any part, component, attachment or accessory that is incorporated into or attached to the vehicle.

Fire and Rescue Apparatus

One (1) Year Material and Workmanship Foam System & Five (5) Year Material and Workmanship Control Head

Limited Warranty

1. LIMITED WARRANTY

Subject to the limitations and exclusions set forth below, Pierce Manufacturing provides the following warranty to the Buyer:

Coverage:	**Limited warranty 1 year parts and labor for for the foam system and 5 years parts and labor for the control head.**
Warranty Begins:	**The date of the original purchase invoice (issued when the product ships from the factory).**
Warranty Period Ends After:	**One (1) Year & Five (5) Year**
Conditions and Exclusions: **See Also Paragraphs 2 thru 4**	**This warranty does not cover repair due to accidents, misuse, and excessive vibration, flying debris, storage damage (freezing), negligence or modification. This warranty is void if any modification or repairs are performed without authorization. This also voids any future warranty.** **This warranty does not cover cost of maintenance or repairs due to lack of required maintenance services as recommended. Performance of the required maintenance and use of proper fluids are the responsibility of the owner.**

This limited warranty shall apply only if the product is properly maintained in accordance with Pierce's maintenance instructions and manuals and is used in service which is normal to the particular model. Normal service means service which does not subject the product to stresses or impacts greater than normally result from careful use. If the Buyer discovers a defect or nonconformity, it must notify Pierce in writing within thirty (30) days after the date of discovery, but in any event prior to the expiration of the warranty period. THIS LIMITED WARRANTY MAY NOT BE ASSIGNED OR OTHERWISE TRANSFERRED BY THE BUYER TO ANY SUBSEQUENT USER OR PURCHASER OR TO ANY OTHER PERSON OR ENTITY.

Notwithstanding anything to the contrary herein, Pierce makes no warranty whatsoever as to:

(a) any integral parts, components, attachments or trade accessories of or to the product that are not manufactured by Pierce, including but not limited to engines, transmissions, drivelines, axles, water pumps and generators; with respect to all such parts, components, attachments and accessories, Pierce shall assign to Buyer the applicable warranties, if any, made by the respective manufacturers thereof;

(b) any vehicle, chassis, or component, part, attachment or accessory damaged by misuse, neglect, fire, exposure to severe environmental or chemical conditions, acidic environment, improper maintenance, accident, crash, or force majeure such as natural disaster, lightning, earthquake, windstorm, hail, flood, war or riot;

(c) any vehicle, chassis or component, part, attachment or accessory that has been repaired, altered or assembled in any way by any person or entity other than Pierce which, in the sole judgment of Pierce, adversely affects the performance, stability or purpose for which it was manufactured; or

(d) products or parts which may in the ordinary course wear out and have to be replaced during the warranty period, including, but not limited to, tires, fluids, gaskets and light bulbs. Pierce assumes no responsibility for the assembly of its parts or subassemblies into finishing products or vehicles unless the assembly is performed by Pierce.

The original purchaser may void this warranty in part or in its entirety if the product is repaired or replaced (a) without prior written approval of the Pierce Customer Service Department; or (b) at a facility which has not been approved by Pierce as to technical capability. Any repairs, modifications, alterations or aftermarket parts added after manufacture without the authorization of Pierce may void this warranty.

2. DISCLAIMERS OF WARRANTIES

THE WARRANTY SET FORTH IN PARAGRAPH 1 IS THE SOLE AND EXCLUSIVE WARRANTY GIVEN BY PIERCE. PIERCE HEREBY DISCLAIMS AND EXCLUDES ALL OTHER WARRANTIES, WHETHER EXPRESS, IMPLIED OR STATUTORY, INCLUDING WITHOUT LIMITATION ANY WARRANTY OF MERCHANTABILITY, ANY WARRANTY OF FITNESS FOR A PARTICULAR PURPOSE, AND ANY WARRANTIES ARISING FROM COURSE OF DEALING OR USAGE OF TRADE.

3. BUYER'S EXCLUSIVE REMEDY.

If the product fails to conform to the warranty set forth in paragraph 1 during the warranty period, and such nonconformity is not due to misuse, neglect, accident or improper maintenance, Buyer must notify Pierce within the time period specified in paragraph 1, and shall make the product available for inspection by Pierce or its designated agent. At the request of Pierce, any allegedly defective product shall be returned to Pierce by Buyer for examination and/or repair. Buyer shall be responsible for the cost of such transportation, and for risk of loss of or damage to the product during transportation. Within a reasonable time, Pierce shall repair or replace (at Pierce's option and expense) any nonconforming or defective parts. Repair or replacement shall be made only by a facility approved in advance in writing by Pierce. THIS REMEDY SHALL BE THE EXCLUSIVE AND SOLE REMEDY FOR ANY BREACH OF WARRANTY.

4. EXCLUSION OF CONSEQUENTIAL AND INCIDENTAL DAMAGES.

Notwithstanding anything to the contrary herein or in any agreement between Pierce and Buyer, IN NO EVENT SHALL PIERCE BE LIABLE FOR ANY CONSEQUENTIAL, INCIDENTAL, SPECIAL, INDIRECT, OR PUNITIVE DAMAGES WHATSOEVER, WHETHER ARISING OUT OF BREACH OF CONTRACT, WARRANTY, TORT (INCLUDING NEGLIGENCE AND STRICT LIABILITY) OR OTHER THEORY OF LAW OR EQUITY, WITH RESPECT TO VEHICLES OR OTHER PRODUCTS SOLD BY PIERCE, OR THEIR OPERATION OR FAILURE TO OPERATE, OR ANY DEFECTS THEREIN, OR ANY UNDERTAKINGS, ACTS OR OMISSIONS RELATED THERETO, REGARDLESS OF WHETHER PIERCE HAS BEEN INFORMED OF THE POSSIBILITY OF ANY SUCH DAMAGES. Without limiting the generality of the foregoing, Pierce specifically disclaims any liability for property or personal injury damages, penalties, damages for lost profits or revenues, loss of vehicles or products or any associated equipment, cost of substitute vehicles or products, down-time, delay damages, any other types of economic loss, or for any claims by any third party for any such damages.

Note: Any Surety Bond, if a part of the sale of the vehicle as to which this limited warranty is provided, applies only to this Pierce Basic One Year Limited Warranty for such vehicle, and not to other warranties made by Pierce in a separate document (if any) or to the warranties (if any) made by any manufacturer (other than Pierce) of any part, component, attachment or accessory that is incorporated into or attached to the vehicle.

Fire and Rescue Apparatus

Ten (10) Year Pro-Rated Paint and Corrosion

Custom Body

Limited Warranty

1. LIMITED WARRANTY

Subject to the limitations and exclusions set forth below, Pierce Manufacturing provides the following warranty to the Buyer:

Coverage:	**Exterior surfaces of the body shall be free from blistering, peeling, corrosion or any other adhesion defect caused by defective manufacturing methods or paint material selection.**
Warranty Begins:	**The date of the original purchase invoice (issued when the product ships from the factory).**
Warranty Period Ends After:	**Ten (10) Years**
Conditions and Exclusions: **See Also Paragraphs 2 thru 4**	**This limited warranty is applicable to the vehicle in the following percentage costs of warranty repair, if any:** **Topcoat Durability & Appearance: Gloss, Color Retention & Cracking** **0-72 months 100%** **73-96 months 50%** **97-120 months 25%** **Integrity of Coating System: Adhesion, Blistering/Bubbling** **0-36 months 100%** **37-84 months 50%** **85-120 months 25%** **Corrosion: Dissimilar Metal and Crevice** **0-36 months 100%** **37-48 months 50%** **49-72 months 25%** **73-120 months 10%** **Corrosion Perforation** **0-120 months 100%** **This limited warranty applies only to exterior paint. Paint on the vehicle's interior is warranted only under the Pierce Basic One Year Limited Warranty.** **Items not covered by this warranty include:** **(a) Damage from lack of maintenance and cleaning (proper cleaning and maintenance procedures are detailed in the Pierce operation and maintenance manual).** **(b) UV paint fade.** **(c) Any cab not manufactured by Pierce.**

This limited warranty shall apply only if the product is properly maintained in accordance with Pierce's maintenance instructions and manuals and is used in service which is normal to the particular model. Normal service means service which does not subject the product to stresses or impacts greater than normally result from careful use. If the Buyer discovers a defect or nonconformity, it must notify Pierce in writing within thirty (30) days after the date of discovery, but in any event prior to the expiration of the warranty period. THIS LIMITED WARRANTY MAY NOT BE ASSIGNED OR OTHERWISE TRANSFERRED BY THE BUYER TO ANY SUBSEQUENT USER OR PURCHASER OR TO ANY OTHER PERSON OR ENTITY.

Notwithstanding anything to the contrary herein, Pierce makes no warranty whatsoever as to:

(a) any integral parts, components, attachments or trade accessories of or to the product that are not manufactured by Pierce, including but not limited to engines, transmissions, drivelines, axles, water pumps and generators; with respect to all such parts, components, attachments and accessories, Pierce shall assign to Buyer the applicable warranties, if any, made by the respective manufacturers thereof;

(b) any vehicle, chassis, or component, part, attachment or accessory damaged by misuse, neglect, fire, exposure to severe environmental or chemical conditions, acidic environment, improper maintenance, accident, crash, or force majeure such as natural disaster, lightning, earthquake, windstorm, hail, flood, war or riot;

(c) any vehicle, chassis or component, part, attachment or accessory that has been repaired, altered or assembled in any way by any person or entity other than Pierce which, in the sole judgment of Pierce, adversely affects the performance, stability or purpose for which it was manufactured; or

(d) products or parts which may in the ordinary course wear out and have to be replaced during the warranty period, including, but not limited to, tires, fluids, gaskets and light bulbs. Pierce assumes no responsibility for the assembly of its parts or subassemblies into finishing products or vehicles unless the assembly is performed by Pierce.

The original purchaser may void this warranty in part or in its entirety if the product is repaired or replaced (a) without prior written approval of the Pierce Customer Service Department; or (b) at a facility which has not been approved by Pierce as to technical capability. Any repairs, modifications, alterations or aftermarket parts added after manufacture without the authorization of Pierce may void this warranty.

2. DISCLAIMERS OF WARRANTIES

THE WARRANTY SET FORTH IN PARAGRAPH 1 IS THE SOLE AND EXCLUSIVE WARRANTY GIVEN BY PIERCE. PIERCE HEREBY DISCLAIMS AND EXCLUDES ALL OTHER WARRANTIES, WHETHER EXPRESS, IMPLIED OR STATUTORY, INCLUDING WITHOUT LIMITATION ANY WARRANTY OF MERCHANTABILITY, ANY WARRANTY OF FITNESS FOR A PARTICULAR PURPOSE, AND ANY WARRANTIES ARISING FROM COURSE OF DEALING OR USAGE OF TRADE.

3. BUYER'S EXCLUSIVE REMEDY.

If the product fails to conform to the warranty set forth in paragraph 1 during the warranty period, and such nonconformity is not due to misuse, neglect, accident or improper maintenance, Buyer must notify Pierce within the time period specified in paragraph 1, and shall make the product available for inspection by Pierce or its designated agent. At the request of Pierce, any allegedly defective product shall be returned to Pierce by Buyer for examination and/or repair. Buyer shall be responsible for the cost of such transportation, and for risk of loss of or damage to the product during transportation. Within a reasonable time, Pierce shall repair or replace (at Pierce's option and expense) any nonconforming or defective parts. Repair or replacement shall be made only by a facility approved in advance in writing by Pierce. THIS REMEDY SHALL BE THE EXCLUSIVE AND SOLE REMEDY FOR ANY BREACH OF WARRANTY.

4. EXCLUSION OF CONSEQUENTIAL AND INCIDENTAL DAMAGES.

Notwithstanding anything to the contrary herein or in any agreement between Pierce and Buyer, IN NO EVENT SHALL PIERCE BE LIABLE FOR ANY CONSEQUENTIAL, INCIDENTAL, SPECIAL, INDIRECT, OR PUNITIVE DAMAGES WHATSOEVER, WHETHER ARISING OUT OF BREACH OF CONTRACT, WARRANTY, TORT (INCLUDING NEGLIGENCE AND STRICT LIABILITY) OR OTHER THEORY OF LAW OR EQUITY, WITH RESPECT TO VEHICLES OR OTHER PRODUCTS SOLD BY PIERCE, OR THEIR OPERATION OR FAILURE TO OPERATE, OR ANY DEFECTS THEREIN, OR ANY UNDERTAKINGS, ACTS OR OMISSIONS RELATED THERETO, REGARDLESS OF WHETHER PIERCE HAS BEEN INFORMED OF THE POSSIBILITY OF ANY SUCH DAMAGES. Without limiting the generality of the foregoing, Pierce specifically disclaims any liability for property or personal injury damages, penalties, damages for lost profits or revenues, loss of vehicles or products or any associated equipment, cost of substitute vehicles or products, down-time, delay damages, any other types of economic loss, or for any claims by any third party for any such damages.

Note: Any Surety Bond, if a part of the sale of the vehicle as to which this limited warranty is provided, applies only to this Pierce Basic One Year Limited Warranty for such vehicle, and not to other warranties made by Pierce in a separate document (if any) or to the warranties (if any) made by any manufacturer (other than Pierce) of any part, component, attachment or accessory that is incorporated into or attached to the vehicle.

Fire and Rescue Apparatus

Three (3) Year Material and Workmanship Goldstar® Gold Leaf Lamination

Limited Warranty

1. LIMITED WARRANTY

Subject to the limitations and exclusions set forth below, Pierce Manufacturing provides the following warranty to the Buyer:

Coverage:	**Each Goldstar® gold leaf lamination shall be free from defects in material and workmanship.**
Warranty Begins:	**The date of the original purchase invoice (issued when the product ships from the factory).**
Warranty Period Ends After:	**Three (3) Years**
Conditions and Exclusions: **See Also Paragraphs 2 thru 4**	**This warranty does not cover damage from lack of maintenance and cleaning (proper cleaning and maintenance procedures are detailed in the Pierce operation and maintenance manual).**

This limited warranty shall apply only if the product is properly maintained in accordance with Pierce's maintenance instructions and manuals and is used in service which is normal to the particular model. Normal service means service which does not subject the product to stresses or impacts greater than normally result from careful use. If the Buyer discovers a defect or nonconformity, it must notify Pierce in writing within thirty (30) days after the date of discovery, but in any event prior to the expiration of the warranty period. THIS LIMITED WARRANTY MAY NOT BE ASSIGNED OR OTHERWISE TRANSFERRED BY THE BUYER TO ANY SUBSEQUENT USER OR PURCHASER OR TO ANY OTHER PERSON OR ENTITY.

Notwithstanding anything to the contrary herein, Pierce makes no warranty whatsoever as to:

(a) any integral parts, components, attachments or trade accessories of or to the product that are not manufactured by Pierce, including but not limited to engines, transmissions, drivelines, axles, water pumps and generators; with respect to all such parts, components, attachments and accessories, Pierce shall assign to Buyer the applicable warranties, if any, made by the respective manufacturers thereof;

(b) any vehicle, chassis, or component, part, attachment or accessory damaged by misuse, neglect, fire, exposure to severe environmental or chemical conditions, acidic environment, improper maintenance, accident, crash, or force majeure such as natural disaster, lightning, earthquake, windstorm, hail, flood, war or riot;

(c) any vehicle, chassis or component, part, attachment or accessory that has been repaired, altered or assembled in any way by any person or entity other than Pierce which, in the sole judgment of Pierce, adversely affects the performance, stability or purpose for which it was manufactured; or

(d) products or parts which may in the ordinary course wear out and have to be replaced during the warranty period, including, but not limited to, tires, fluids, gaskets and light bulbs. Pierce assumes no responsibility for the assembly of its parts or subassemblies into finishing products or vehicles unless the assembly is performed by Pierce.

The original purchaser may void this warranty in part or in its entirety if the product is repaired or replaced (a) without prior written approval of the Pierce Customer Service Department; or (b) at a facility which has not been approved by Pierce as to technical capability. Any repairs, modifications, alterations or aftermarket parts added after manufacture without the authorization of Pierce may void this warranty.

2. DISCLAIMERS OF WARRANTIES

THE WARRANTY SET FORTH IN PARAGRAPH 1 IS THE SOLE AND EXCLUSIVE WARRANTY GIVEN BY PIERCE. PIERCE HEREBY DISCLAIMS AND EXCLUDES ALL OTHER WARRANTIES, WHETHER EXPRESS, IMPLIED OR STATUTORY, INCLUDING WITHOUT LIMITATION ANY WARRANTY OF MERCHANTABILITY, ANY WARRANTY OF FITNESS FOR A PARTICULAR PURPOSE, AND ANY WARRANTIES ARISING FROM COURSE OF DEALING OR USAGE OF TRADE.

3. BUYER'S EXCLUSIVE REMEDY.

If the product fails to conform to the warranty set forth in paragraph 1 during the warranty period, and such nonconformity is not due to misuse, neglect, accident or improper maintenance, Buyer must notify Pierce within the time period specified in paragraph 1, and shall make the product available for inspection by Pierce or its designated agent. At the request of Pierce, any allegedly defective product shall be returned to Pierce by Buyer for examination and/or repair. Buyer shall be responsible for the cost of such transportation, and for risk of loss of or damage to the product during transportation. Within a reasonable time, Pierce shall repair or replace (at Pierce's option and expense) any nonconforming or defective parts. Repair or replacement shall be made only by a facility approved in advance in writing by Pierce. THIS REMEDY SHALL BE THE EXCLUSIVE AND SOLE REMEDY FOR ANY BREACH OF WARRANTY.

4. EXCLUSION OF CONSEQUENTIAL AND INCIDENTAL DAMAGES.

Notwithstanding anything to the contrary herein or in any agreement between Pierce and Buyer, IN NO EVENT SHALL PIERCE BE LIABLE FOR ANY CONSEQUENTIAL, INCIDENTAL, SPECIAL, INDIRECT, OR PUNITIVE DAMAGES WHATSOEVER, WHETHER ARISING OUT OF BREACH OF CONTRACT, WARRANTY, TORT (INCLUDING NEGLIGENCE AND STRICT LIABILITY) OR OTHER THEORY OF LAW OR EQUITY, WITH RESPECT TO VEHICLES OR OTHER PRODUCTS SOLD BY PIERCE, OR THEIR OPERATION OR FAILURE TO OPERATE, OR ANY DEFECTS THEREIN, OR ANY UNDERTAKINGS, ACTS OR OMISSIONS RELATED THERETO, REGARDLESS OF WHETHER PIERCE HAS BEEN INFORMED OF THE POSSIBILITY OF ANY SUCH DAMAGES. Without limiting the generality of the foregoing, Pierce specifically disclaims any liability for property or personal injury damages, penalties, damages for lost profits or revenues, loss of vehicles or products or any associated equipment, cost of substitute vehicles or products, down-time, delay damages, any other types of economic loss, or for any claims by any third party for any such damages.

Note: Any Surety Bond, if a part of the sale of the vehicle as to which this limited warranty is provided, applies only to this Pierce Basic One Year Limited Warranty for such vehicle, and not to other warranties made by Pierce in a separate document (if any) or to the warranties (if any) made by any manufacturer (other than Pierce) of any part, component, attachment or accessory that is incorporated into or attached to the vehicle.

GOLDEN STATE
FIRE APPARATUS

goldenstatefire.com

5 DEALER SUPPLIED PRODUCTS AND/OR SERVICES

Exhibit "D"

DEALER SUPPLIED EQUIPMENT and/or SERVICES
The following items and/or services will be provided by Golden State Fire Apparatus Inc. (GSFA) prior to final delivery:

LICENSED MANUFACTURER
The State of California Vehicle Code, section 11701 requires "every manufacturer of a vehicle subject to registration shall make application to the Department of Motor Vehicles (DMV) for a license containing a general distinguishing number". The manufacturer has a current license at time of proposal and shall provide a copy upon request. Temporary licenses are not acceptable.

LICENSED DEALERSHIP
The State of California Vehicle Code, section 11701 requires a "dealer in vehicles of a type subject to registration, shall make application to the Department of Motor Vehicles (DMV) for a license containing a general distinguishing number". Golden State Fire Apparatus, Inc. has a current license at time of bid as outlined above and is available upon request. Temporary licenses are not acceptable.

LICENSED SALES REPRESENTATIVE
The State of California Vehicle Code, section 11800 requires that it shall be "unlawful for any person to function as a vehicle salesperson without having first procured a license issued by the Department of Motor Vehicles (DMV)". The representative has a current vehicle salespersons license at time of proposal and shall provide a copy upon request. Temporary licenses are not acceptable.

VEHICLE REGISTRATION
The State of California Vehicle Code section 11739 requires that the "dealer of a new motor vehicle sale is responsible for applying for the title, securing vehicle registration, and obtaining license plates for the Customer" through the Department of Motor Vehicles (DMV). Golden State Fire Apparatus, Inc. is a factory-authorized dealer of the vehicle being sold and is authorized to register with the State of California as a new vehicle manufacturer.

GSFA will make all necessary applications and complete all transfer papers, including applying for California Exempt "E" license plates.

WEEKLY PROGRESS PHOTOGRAPHS
GSFA will provide weekly photographs of the apparatus or the major components as they are being constructed. The photographs will commence at the start of the manufacturing process and will continue through production by the manufacturer. The reports will show the progress of the apparatus through the course of each week. Special attention will be given to show the unique features and aspects of the apparatus as construction progresses.

PRE-CONSTRUCTION, CUSTOMER LOCATION
A pre-construction meeting will be conducted at the customer location. The intent of this meeting is to review and finalize, in detail, the specifications prior to the start of production. The pre-construction meeting will have a duration of one (1) day and be scheduled at times mutually agreed upon between Golden State Fire Apparatus and the Customer.

FINAL INSPECTION FACTORY TRIP
A final inspection trip to the manufacturing facility will be provided for three (3) Customer representative(s). The intent of this trip is to ensure that the apparatus is built to specification and to detect any deficiencies that require correction. The final inspection trip will have a duration of five (5) days and four (4) nights and be scheduled at times mutually agreed upon between Golden State Fire Apparatus (GSFA). and the Customer. Costs for airfare, lodging, meals and ground transportation while at the manufacturers location will be the responsibility of GSFA. Air travel will be from one of the following airports: Oakland, Redding, Eureka, Fresno or Reno.

Costs such as Customer ground transportation in California, Customer airport parking, Customer luggage fees and Customer incidentals while traveling to the factory will be the responsibility of the Customer. Flight reservations are non-refundable and in the event of a cancellation after booking, the Customer will be responsible for all costs associated with this cancellation, which may include not only the original ticket cost but also any change or cancellation fees imposed by the airline and/ or travel agency. Flight reservations are also non-transferable.

DELIVERY TO AUTHORIZED SERVICE FACILITY

GSFA will, at their expense, deliver the apparatus (including any applicable equipment, spare parts, and supplies) to their Northern California facility in Sacramento for a dealer preparation inspection.

To ensure proper break in of all components while still under warranty, the apparatus shall be delivered under its own power - rail or truck freight shall not be acceptable.

PRE-DELIVERY SERVICE

After transportation from the factory and prior to delivery, the apparatus will receive a pre-delivery service to confirm proper operation and correction of any issues found as a result of said inspection. The Golden State Fire Apparatus, Inc. pre-delivery service consists of the following:

- Engine Compartment and Undercarriage – Check for any broken mounting brackets and inspect for correct capacities of the following (if applicable): engine oil, coolant, power steering fluid, washer reservoir fluid, transmission fluid, rear end fluid, pump transmission oil, and primer oil.

- Interior – Operate all doors, windows, and locks for proper adjustment. Check upholstery.

- Exterior – Repair reasonable paint scratches or chips. Tighten any loose hardware and inspect tires and wheels for proper pressure and lug torquing.

- Road Test – With the water tank (if applicable) full, the apparatus will be driven approximately twenty miles which allows the drive train components to get up to operating temperature. Road test will be on both city and highway roads. A DOT compliant brake test will be conducted to ensure the system is holding air. The brake condition and wheel seals will also be inspected.

- Electrical - Operate all lights, sirens, and other electrical accessories to verify operation.

- Pump - If applicable, vacuum test the pump to hold for 15 minutes. After vacuum test, operate the relief valve, transfer valve and check pump shift. Check water tank for leaks and inspect water level gauge for calibration. With discharge caps loose, rapid test all individual gauges and main gauges for calibration. Lubricate valve rods.

- Foam System – If applicable, tighten caps and connect foam lines. Test selector, valves, metering valve and operation of foam system (including flush).

- Fuel Tank - Fuel tank will be filled at the dealership location prior to final delivery.

- DEF Tank - DEF tank will be filled at the dealership location prior to final delivery.

- Wash - The apparatus will be thoroughly washed at the dealership location prior to final delivery.

DEALER PROVIDED LOOSE EQUIPMENT

The dealer will provide and install the following equipment (per unit) prior to final delivery to the customer location:

- Two (2) lengths of hard suction hose: 10’ x 3.00” w 2.50” NST rocker lug couplings
- One (1) barrel strainer w 2.50” NST rocker lug coupling

DEALER PROVIDED ELECTRONICS EQUIPMENT INSTALLATION

The dealer will install the following customer provided electronics equipment, per direction of the customer and prior to final delivery to the customer location:

- One (1) customer provided two way radio system with remote head and interface cable
- One (1) customer provided two way radio speaker

If customer elects to have additional equipment installed at the dealership, the customer will be responsible for additional charges; which may be incurred.

FINAL DELIVERY (CUSTOMER LOCATION)

GSFA will, at their expense, deliver the Product (including any applicable equipment, spare parts, and supplies) to the Customer specified address once completed. Prior to delivery of the Product, Customer agrees to provide proof of liability and physical damage insurance to GSFA. GSFA will not release the Product to the Customer until such proof of insurance is provided.

It is the responsibility of the Customer to have any outstanding balance due, paid in full to GSFA, prior to or at the time that the Product is complete and ready to deliver. If payment is late or delivery is delayed pending payment, a daily finance charge of $150.00 and a daily storage fee of $50.00 may apply until such payment is received.

Due to insurance liability, the Product will not be delivered without full acceptance and full payment (or prior written agreement between the Customer and GSFA).

END OF EXHIBIT “D”